Micro & Maxi Stand (BN8410 & BN8411)

Designer: EO
Date: 05.03.25
Revision: Issue A

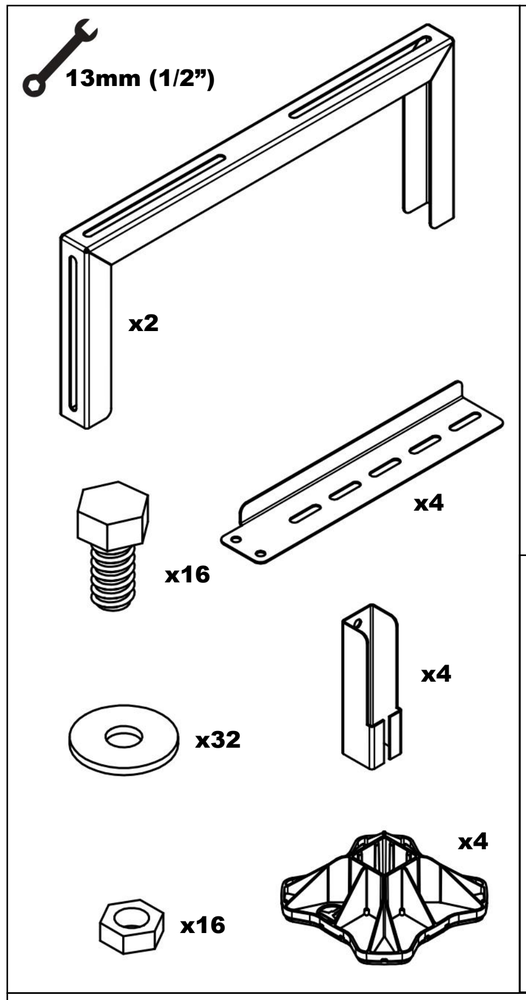

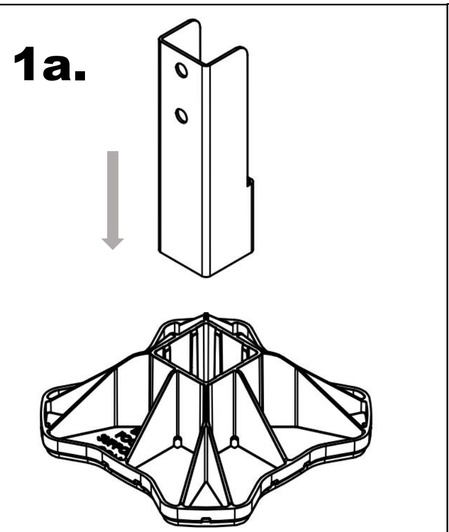

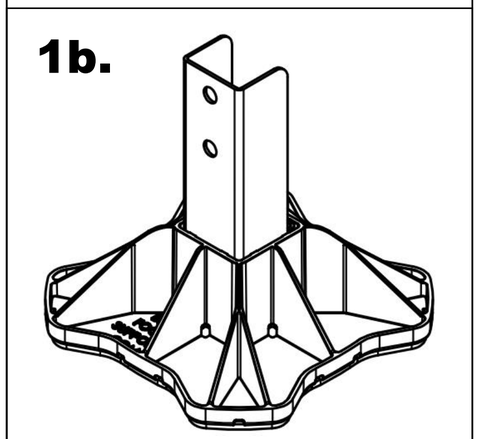

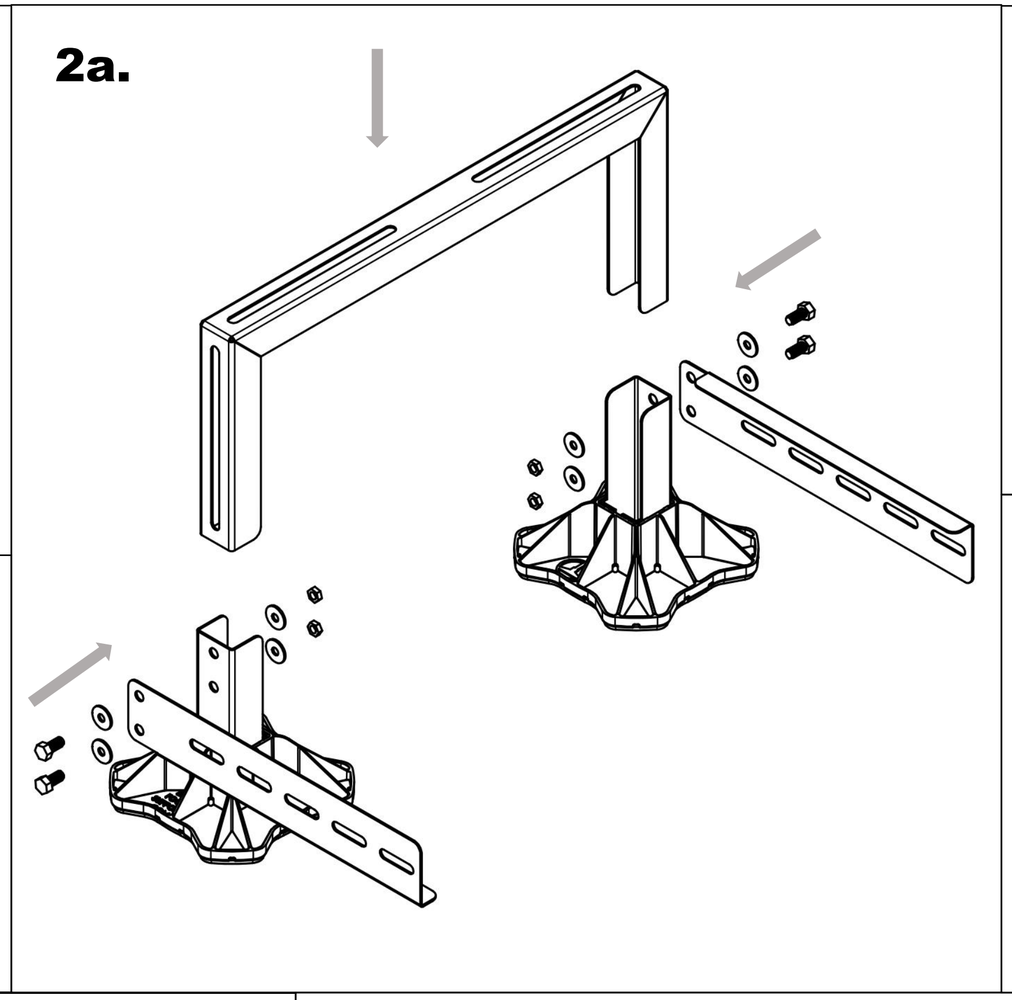

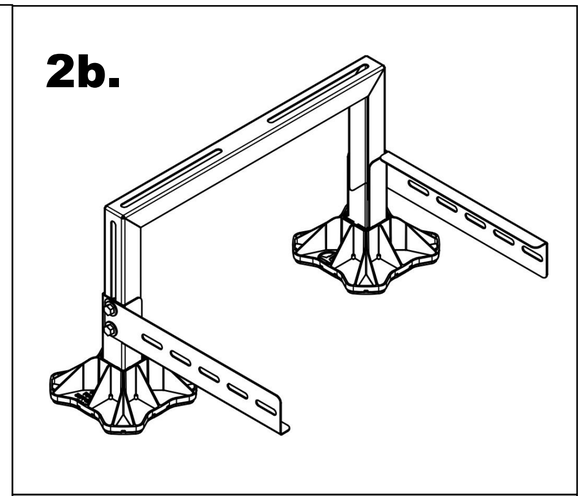

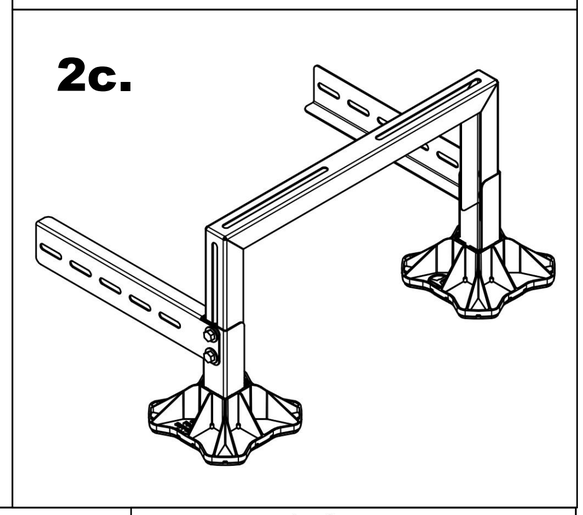

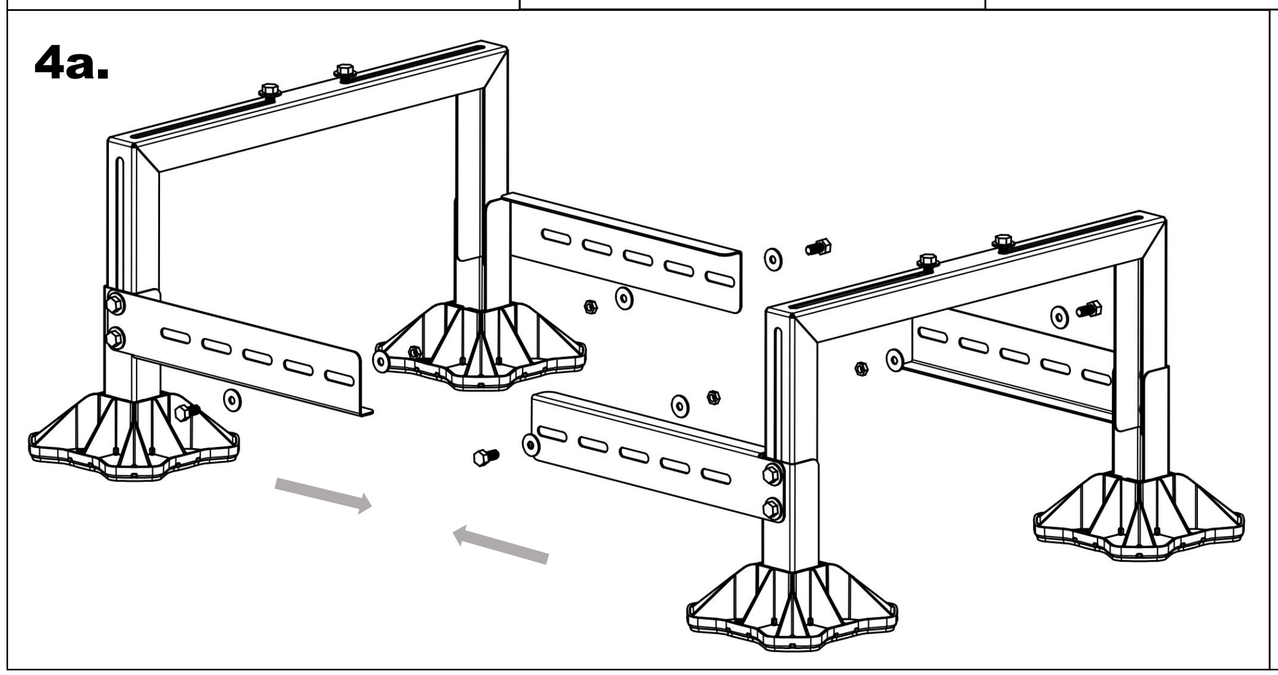

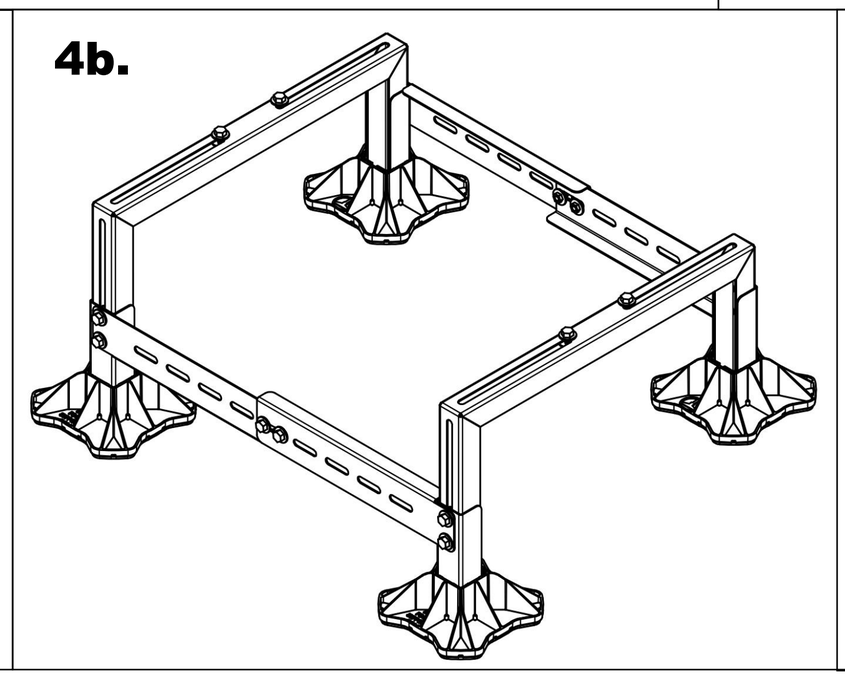

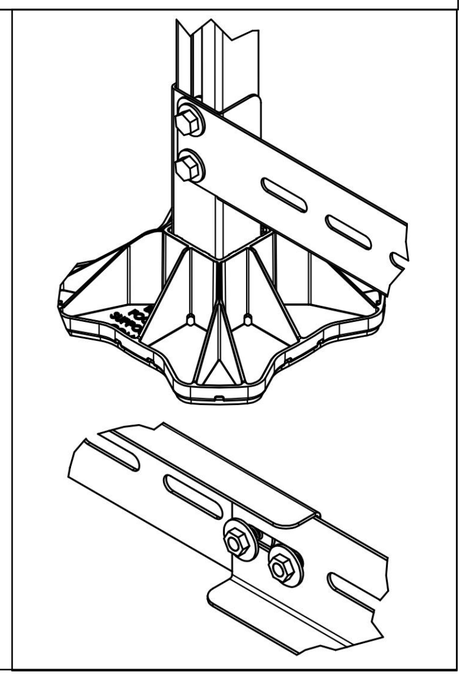

bigfootsupport.com

Material grade: BS EN 10219-1:2006 (S235JR). Welding standard: BS EN ISO 15614-1. Galvanizing standard: BS EN ISO 1461:2009
Reference specification document “Custom Fabrication Specification” (BF-SPEC-050411) for further information
Reference specification document “Big Foot Systems Cross Bar Specification (BF-SPEC-230610) for further information