

Mini Frame & Extension Kit

The ideal choice for ground-mounted support of all types of condensing units, Ductless Mini-Splits, Unitary and VRV/VRF

MINI FRAME:

For supporting small condensing units and heat pumps

Ideal for ground mounting or wind protected environments

KEY FEATURES ↓

- Suitable for most mini splits & heat pumps
- Easy adjustment to suit any requirement
- Complete boxed kit of required components
- Install multiple units with extension kit

KIT INCLUDES ↓

Components	Frame	Ext.
8” foot & mat	× 4	× 2
35” End bar	× 2	× 1
27.5” Cross bar	× 2	–
27.5” Cross bar	–	× 2
Unit fixing kit	× 1	× 1

Mini Frame BN8100 &
Extension Kit BN8101

Mini Frame – Tall BN8100/1 &
Extension Kit – Tall BN8101/1

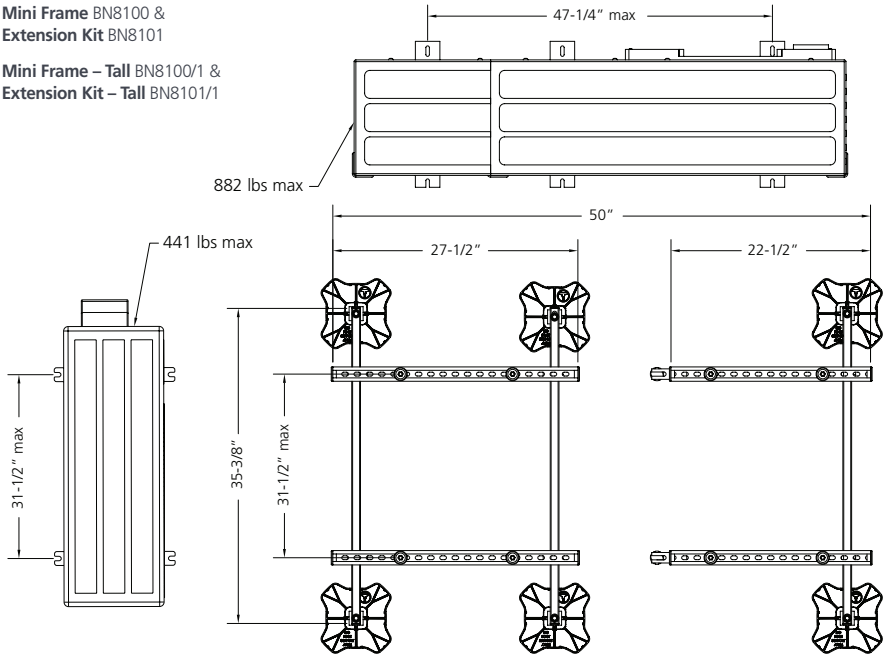

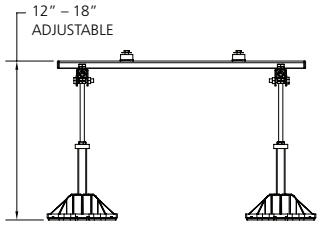

Mini Frame BN8100 &
Extension Kit BN8101

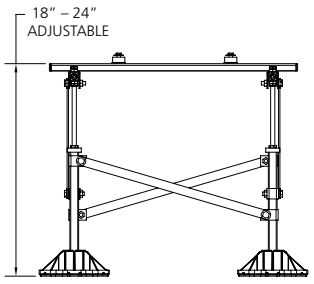

Mini Frame – Tall BN8100/1 &
Extension Kit – Tall BN8101/1

Description	Part No.	Length (in)	Width (in)	Height (in)	Max. Load (lbs)
Mini Frame	**BN8100**	27.5	31.5”	12-18”	441
Mini Extension Kit	**BN8101**	22.5			
Mini Frame – Tall	**BN8100/1**	27.5		18-24”	
Mini Extension Kit – Tall	**BN8101/1**	22.5			