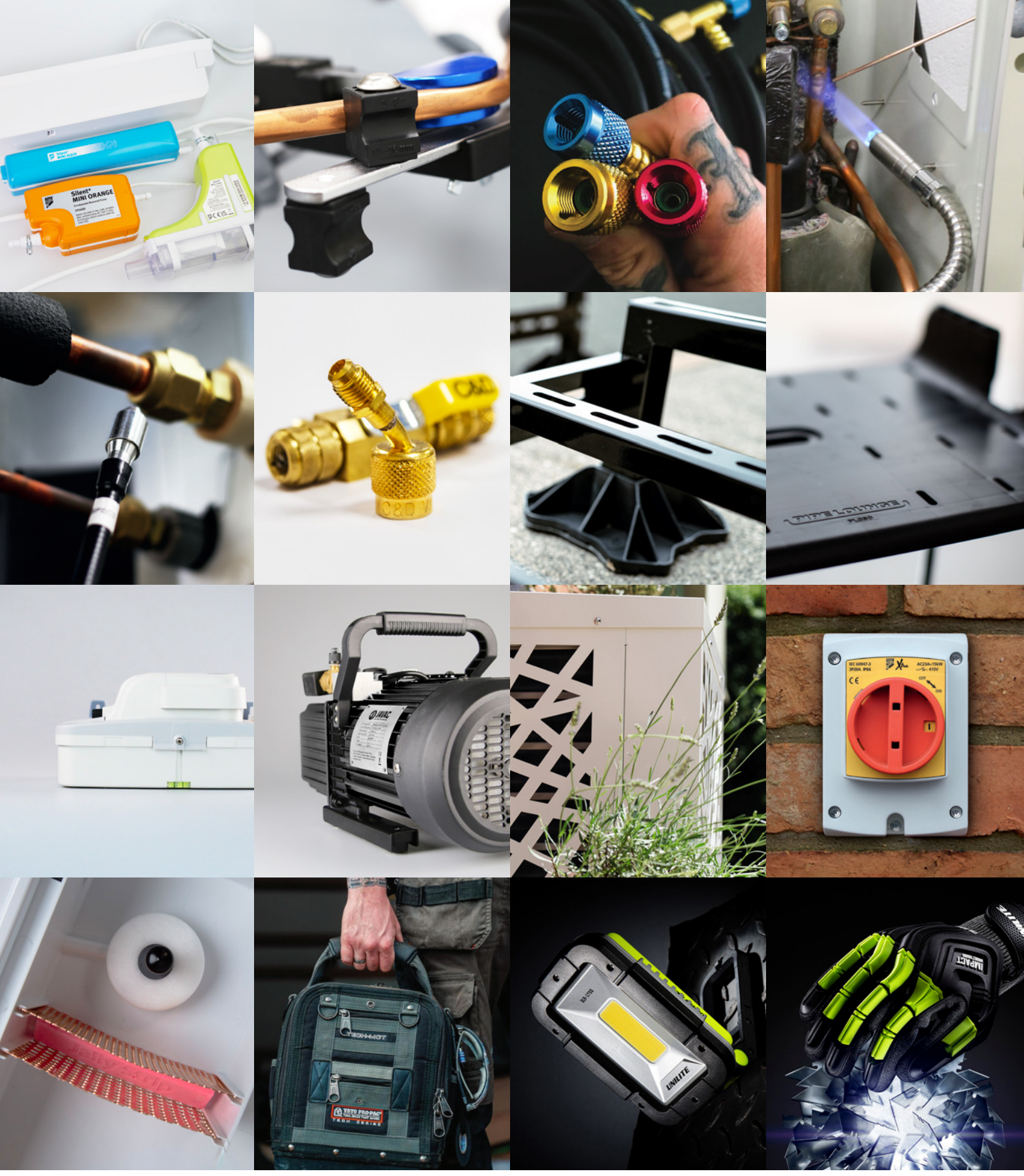


ASPEN PUMPS GROUP

# Product Guide

Making life easier for the HVAC/R engineer


TOSH

# Contents


**01 Condensate Removal Pumps**
- Silent+ Mini Pumps (The World's Quietest) 6-11
- Mini Pumps 12-16
- Peristaltic Pumps 17-19
- Tank Pumps 20-27
- Supermarket Pumps 28-32
- Boiler Pumps 33-36

**02 Service & Tooling**
- Hand Tools 38-51
- Knives / Cutters 52-54
- Lifters 55-56

**03 Recovery, Vacuum & Charging**
- Recovery Units 58-61
- Vacuum Pumps 62-64
- Ultimate Hi-Flow 65-71
- Hose 72-76
- Kits 77
- Manifolds 78-79
- Gauges & Oils 80-81
- Thermometers 82
- Scales 83-84
- Nitrogen 85-87
- Accessories 88

**04 Brazing & Welding**
- Brazing & Welding Kits 90
- Brazing & Welding Torches 91-93
- Heat Blockers & Accessories 94

**05 Leak Detection**
- Refrigerant 96-97
- Sprays 98
- Ultra Violet 99-102

**06 Brass & Copper Fittings**
- About C&D 104-105
- Service Kits 106-108
- Smartlock 109-110

**07 Support & Mounting**
- Rubber Feet 112-114
- PVC Mounting Blocks 115
- Support Feet 116-118
- Heat Pump Kit 119
- Frames 120-123
- Wall Brackets 124-127
- Roof Brackets 128
- Anti-Vibration Dampers 129-131
- Anti vibration pads & strips 132
- Trays 133
- Accessories 134

**08 Condensate Management & Drainage**
- Vinyl Tubes 136
- Rigid Pipe 137
- Flexible Tubes 138
- Drainage Fittings & Spares 139
- Pipelounge 140-141
- Connectors 142-143
- Pipe Support Clips 144-150
- Tape 151
- Drain Cleaner & Unblocker Range 152

**09 Cages & Acoustic Housing**
- Design Box 154
- Protection Guards 155
- Acoustic Guards 156

**10 Electrical**
- Isolators 158-159
- Accessories 160

**11 Maintenence**
- Evaporator 162-163
- Condenser 164
- Universal 165
- Drain Maintenance 166
- Refrigeration & Ice Machines 167
- Specialist Chemicals 168-171
- Accessories 172-174

**12 Tool Storage & bags**
- Veto EVO System 176-177
- Veto Pro Pac Tool Bags 178-185
- Norwalk Bags 186

**13 Lighting & Torches**
- Site Lights 188-190
- Inspection Lights 191-201
- Head Torches 202-205
- Flashlights 206-207
- ATEX Lights 208-210

**14 PPE**
- Safety Glasses 212-214
- Cut & Impact-Resistant Gloves 215
- Zipped Jumpers 216

**The Brands 218**


Information correct at time of going to press. Not all products are available in all regions.

ASPEN PUMPS GROUP

Aspen Pumps Group is unique in its global reach, trading in over 100 countries worldwide.

However, Aspen is not purely an export business; it is a multi-national organisation with sales teams across the world with offices in 4 continents. Our continuous investment in people and warehouse infrastructure means we are a leader in the provision of service, quality and customer support. This approach to business means we have the most extensive and well supported wholesaler partnership network in the world.

The Aspen Pumps Group takes pride in its business performance, celebrating success in its core capabilities of Enterprise, Innovation and International Trade through winning Queen's Awards for each (2009, 2014, 2019).

**Aspen Pumps Group – a global award winning business.**

***Ropemakers, Hailsham UK:***
*Our new 33,500sq ft warehouse ready to house our ever expanding portfolio of products. Just one of our many warehouses across the globe designed to give you the best in customer service.*

Information correct at time of going to press. Not all products are available in all regions.

| | |
|---|---|
| Silent+ Mini Pumps | 6-11 |
| Mini Pumps | 12-16 |
| Peristaltic Pumps | 17-19 |
| Tank Pumps | 20-27 |
| Supermarket Pumps | 28-32 |
| Boiler Pumps | 33-36 |


# 01

# CONDENSATE REMOVAL PUMPS




ASPEN PUMPS GROUP

# Silent+ Mini Pumps

Today end users are demanding quieter air conditioning pumps in areas such as offices and hotels. Silent+ pumps are perfectly suited for these types of applications. The Silent+ range is designed around a 'total system approach' to ensure they operate as quietly as possible without compromising on performance.



Silent+ Mini White



Silent+ Mini Lime®



Silent+ Mini Aqua®




Silent+ Mini Orange®

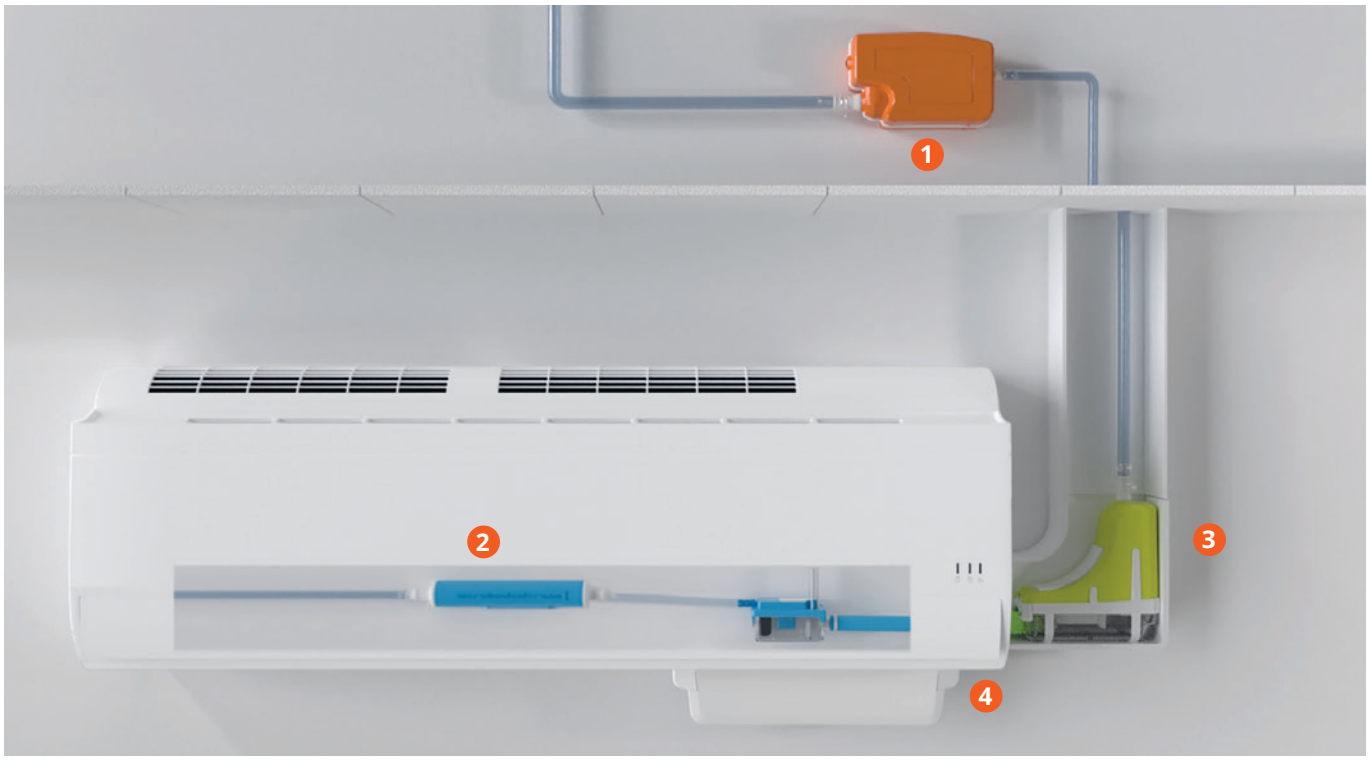


**1** In the ceiling (Note: anti vibration bracket) **2** In the AC unit **3** Within the trunking **4** Under the unit

Information correct at time of going to press. Not all products are available in all regions.

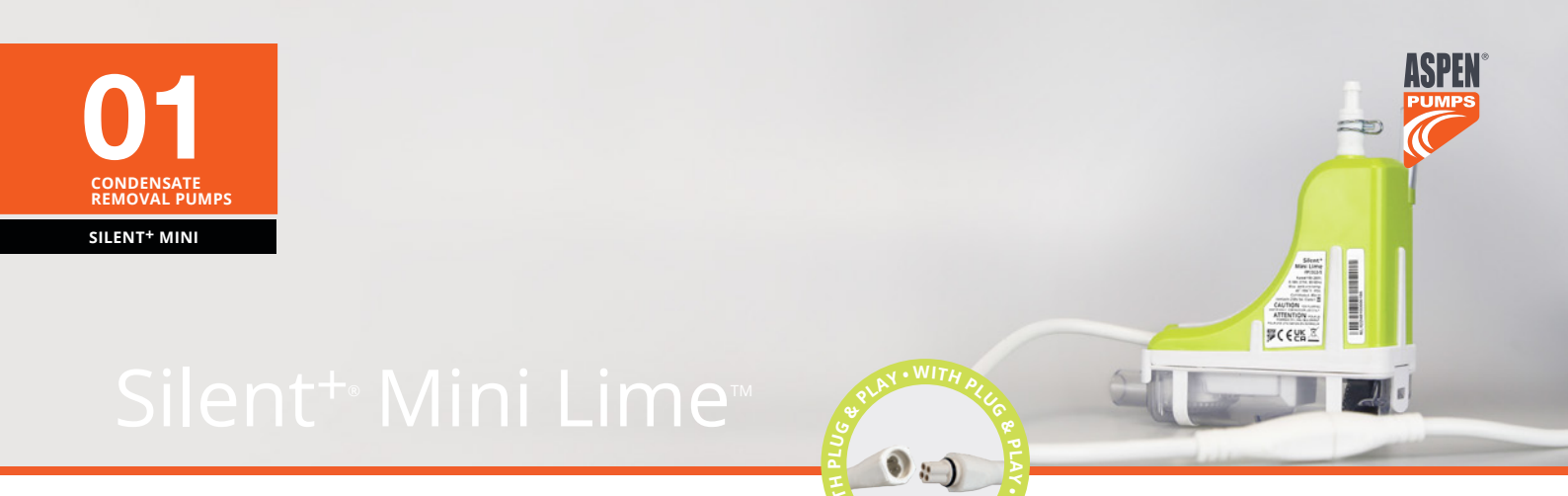

# Silent+® Mini Lime™




## CONDENSATE REMOVAL PUMP

The new and improved 5th gen Silent+ Mini Lime – just 16dB(A) this is the quietest and most versatile of elbow pumps. Simple and flexible to install. The proven technology delivers an impressive flow rate and lower power consumption. All round maximum performance, on-demand power, near-silent operation, optimum reliability and increased energy efficiency.

- 40L/h max. flow
- 15m max. rec. head
- 16dB(A) @ 1m

## Key Features

- Backwards compatible Plug & Play cable
- Fits all popular trunking systems
- Quick install – no longer need for a damper, anti-siphon
- 40L/h flow rate and up to 10 x lower power consumption

## Suitability

- Up to 46kW / 157,000Btu/h
- High wall split systems
- Left or right install with range of trunking systems
- ***Perfect for...***
  Commercial and domestic use where silence is important

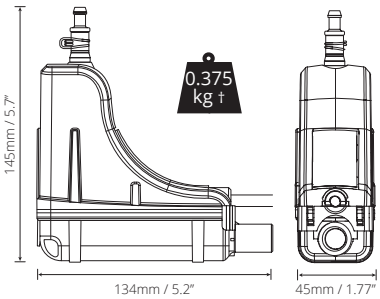


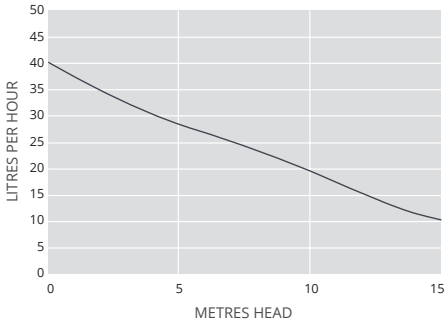


| Univolt 100-250 VAC 50-60Hz | |
|---|---|
| Max. flow | 40L/h @ 0m head |
| Max. rec. head | 15m |
| dB(A) @ 1m | 16* |
| Power supply | 100-250 VAC, 0.18A, 2.1W, 50/60Hz |
| Rated | Continuous |
| Class | II ⧈ |
| Max. unit output | Up to 46kW / 157000Btu/h |
| Max. ambient temp | 40°C |
| Inlet/Outlet connections | Inlet o/d: Ø16mm Outlet o/d: Ø6mm |
| IP Protection | IP24 |
| Safety switch | 5.0A N.C. (Normally Closed) |
| Self priming | ✓ |

*Assuming solid wall construction with a 2kW unit.

**IN THE BOX**

Silent+ Mini Lime pump (including 1.5m Plug & Play cable) • 500mm Lime green inlet hose 14mm ID • 40mm Vinyl breather tube 6mm ID • Elbow front and back • 800mm trunking front and back • Internal trunking sleeve (Slimline system only) • Gasket (Slimline, S-Ducting and Inoac systems only) • Ceiling plate • Drain connector kit • Fixing kit • Quick Start Guide

**SUGGESTED ACCESSORIES**

| Description | | Part No. |
|---|---|---|
| 1 Amp Fuse |  | FP2620 |
| Tube To Soil Stack Adaptor |  | FP2038 |
| Vinyl Tube Braided 1/4" (6mm) |  | AX5100 |

**SYSTEM OPTIONS**

| System | | Colour | Part No. |
|---|---|---|---|
| Slimline | 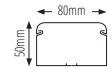  | ○ Ivory | FP3312/5 |
| | | ○ White | FP3319/5 |
| EuroSplit | 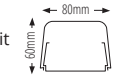  | ○ Pure White | FP3470/5 |
| | | ○ Signal White | FP3471/5 |
| | | ○ Light Ivory | FP3472/5 |
| | | ○ Anthracite | FP3473/5 |
| | | ● Black | FP3474/5 |
| O-Ducting | 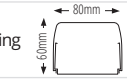  | ○ White | FP3327/5 ‡‡ |
| S-Ducting | 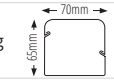  | ○ White | FP3320/5 ‡ |
| Inoac | 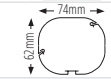  | ○ White | FP3321/5 |
| Silent+ Mini Lime Replacement† | | | FP3322/5 |

† Pump only – no trunking included.
‡ FP3320/5 trunking system is SpeediDuct® compatible.
‡‡ FP3327/5 trunking system is Optimal® compatible.
(SpeediDuct® & Optimal Duct are registered trademarks of Castel Engineering).

Download manual at aspenpumps.com

Watch installation video at aspenpumps.com

Information correct at time of going to press. Not all products are available in all regions.

ASPEN PUMPS

## THE NEW SILENT+ MINI LIME

# QUIETLY BRILLIANT










**Simple & faster install.**
No need for a damper, anti-siphon, buttons or lights.

No need for a Maxi Lime – this pump is a Mini and Maxi all-in-one.

**Fits all trunking systems.**
Plus, our Kwik Fix range is available in three colours (white, cream, black).

**Plug & Play.** Backwards compatible. Perfect for replacement installations.

Replacement pump available, alongside the complete system.

**Near-silent operation.** As low as 16dB(A)@1m.

Variable speed, on demand power, no-touching parts = silence.

**Proven tech.** Same tech as our best-selling Silent+ Mini White.
Only works when it needs to. Up to 10 x lower power consumption.

An impressive flow rate of up to 40 l/h, larger tank and head capability.

**Satisfaction guaranteed.** All backed with a three year guarantee.

Information correct at time of going to press. Not all products are available in all regions.




# Silent+® Mini Orange™

WITH PLUG & PLAY • WITH PLUG & PLAY •

## CONDENSATE REMOVAL PUMP

The world's No.1 Orange mini pump is now better than ever. Using our proven 5th Gen Technology, the Silent+ Mini Orange boasts sound levels as low as 16dB(A)*. So quiet it eliminates the need for additional noise or vibration dampers. Capacitance sensor technology, provides intelligent, adaptive flow rates. Quietly brilliant.

- 35L/h max. flow
- 10m max. rec. head
- As low as 16dB(A)*

## Key Features

- Proven 5th Gen Technology: Capacitance Sensing & Rotary Diaphragm = Silence & Power
- Low maintenance
- Plug & Play**
- 3 year warranty

## Suitability

- Up to 40kW / 136,000Btu/h
- Ducted units; floor standing & chassis units; high wall split systems
- ***Perfect for...*** small commercial and residential units

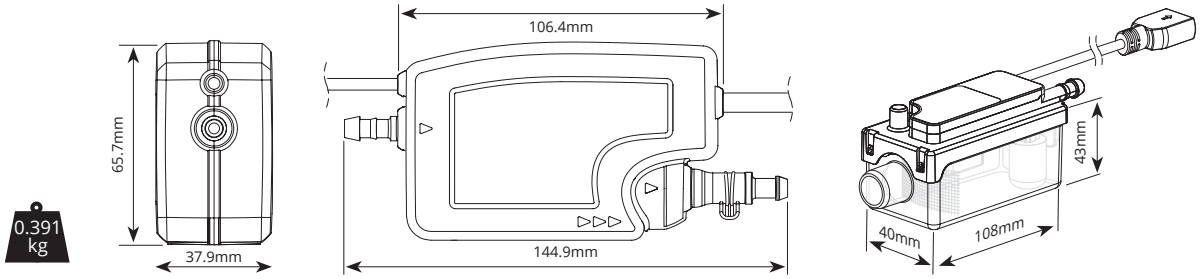


| SPECIFICATIONS | |
|---|---|
| Max. flow | 35L/h @ 0m head |
| Max. rec. head | 10m |
| Max. suction lift | 1.5m |
| Min. dB(A) @ 1m | 16dB(A)* |
| Power supply | 100-250VAC, 0.18A, 2.4W, 50/60 Hz |
| Rated | Continuous |
| Class | II ⧈ |
| Max. unit output | 40kW / 136,000Btu/h |
| Max. ambient temp | 40°C (104°F) |
| IP Protection | IP24 |
| Inlet o/d | Ø16mm (5/8") |
| Outlet o/d | Ø6mm (1/4") |
| Safety switch | 5.0 A Normally closed |
| Self priming | ✓ |

*assuming solid wall construction with a 2kW unit

**not backwards compatible

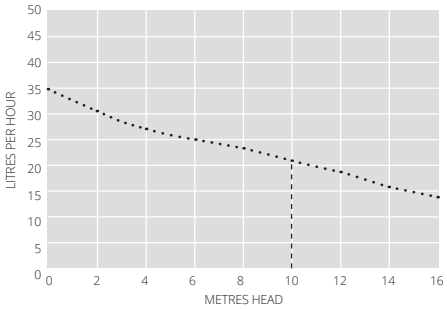


| OPTIONS | |
|---|---|
| Silent+ Mini Orange | FP3430 |

**IN THE BOX**

Silent+ Mini Orange 5th Gen pump • Reservoir (inc. filter and lid) • 1.5m Plug & play cable** • 1.5m clear PVC tube • 150mm clear vent hose • 220mm Orange inlet hose • Drain connector kit: straight connector and rubber elbow • Quick start guide

Download full manual at aspenpumps.com

**SUGGESTED ACCESSORIES**

| Description | | Part No. |
|---|---|---|
| Hose Clamp 10.1 dia. (x10) |  | B3340 |
| S+ Mini Pump spare filters (x10) |  | FP3330 |
| Barbed anti-siphon device |  | FP3336/1 |
| Reservoir copper mesh filter (x10) |  | FP3460 |
| Universal fixing bracket |  | FP3463 |
| Mini Pump reservoir kit |  | FP3461 |

Information correct at time of going to press. Not all products are available in all regions.




# Silent+® Mini Aqua™

WITH PLUG & PLAY • WITH PLUG & PLAY • WITH PLUG & PLAY •

## CONDENSATE REMOVAL PUMP

The Silent+ Mini Aqua keeps its sleek and slender form offering unparalleled installation flexibility. It fits neatly into trunking and inside mini split units. Packed with our proven 5th Gen Technology, it's unbeatable silence – a barely audible 16dB(A)*, combined with intelligent, adaptive flow rates – further extends pump life, maximises reliability and improves energy efficiency. Quietly brilliant.

- 35L/h max. flow
- 10m max. rec. head
- As low as 16dB(A)*

## Key Features

- Slim profile
- Proven 5th Gen Technology: Capacitance Sensing & Rotary Diaphragm = Silence & Power
- Low maintenance
- Plug & Play**
- 3 year warranty

## Suitability

- Up to 40kW / 136,000Btu/h
- Ducted units; floor standing & chassis units; high wall mini split systems
- ***Perfect for...*** smaller commercial and domestic applications, where silence is needed

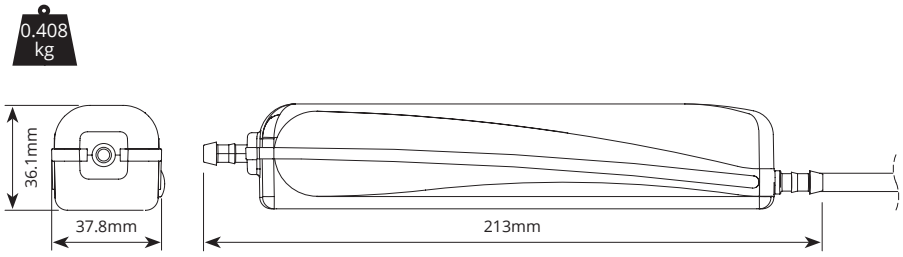


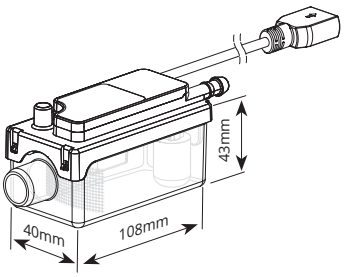


| SPECIFICATIONS | |
|---|---|
| Max. flow | 35L/h @ 0m head |
| Max. rec. head | 10m |
| Max. suction lift | 1.5m |
| Min. dB(A) @ 1m | 16dB(A)* |
| Power supply | 100-250VAC, 0.18A, 2.4W, 50/60 Hz |
| Rated | Continuous |
| Class | II ⧈ |
| Max. unit output | 40kW / 136,000Btu/h |
| Max. ambient temp | 40°C (104°F) |
| IP Protection | IP24 |
| Inlet o/d | Ø16mm (5/8") |
| Outlet o/d | Ø6mm (1/4") |
| Safety switch | 5.0 A Normally closed |
| Self priming | ✓ |

* assuming solid wall construction with a 2kW unit
** not backwards compatible

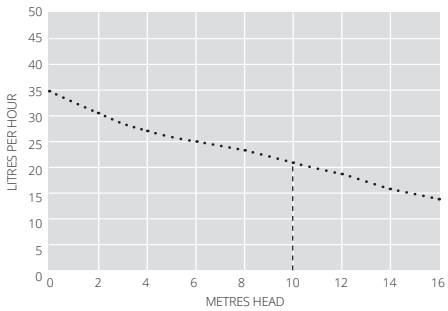


| OPTIONS | |
|---|---|
| Silent+ Mini Aqua | FP3420 |

**IN THE BOX**

Silent+ Mini Aqua 5th Gen pump • Reservoir (inc. filter and lid) • 1.5m Plug & play cable** • 1.5m clear PVC tube • 150mm clear vent hose • 220mm blue inlet hose • Drain connector kit: straight connector and rubber elbow • Quick start guide

Download full manual at aspenpumps.com

**SUGGESTED ACCESSORIES**

| Description | | Part No. |
|---|---|---|
| Hose Clamp 10.1 dia. (x10) |  | B3340 |
| S+ Mini Pump spare filters (x10) |  | FP3330 |
| Barbed anti-siphon device |  | FP3336/1 |
| Reservoir copper mesh filter (x10) |  | FP3460 |
| Universal fixing bracket |  | FP3463 |
| Mini Pump reservoir kit |  | FP3461 |

Information correct at time of going to press. Not all products are available in all regions.



# Silent+® Mini White™

## CONDENSATE REMOVAL PUMP

Incredibly quiet, easy to install and maintain, the Silent+ Mini White has been designed to fit either side of the evaporator unit. The reservoir is simple to unclip for cleaning and maintenance.

- 45L/h max. flow
- 10m max. rec. head (flow rate 23L/h)
- As low as 16dB(A) when operating

### Key Features

- Ultra quiet operation
- Extra quick to fit
- Compact & discreet
- Removable reservoir

### Suitability

- Up to 16kW / 54,000Btu/h
- High wall mini split systems
- ***Perfect for...*** domestic environments where minimising audible noise is crucially important

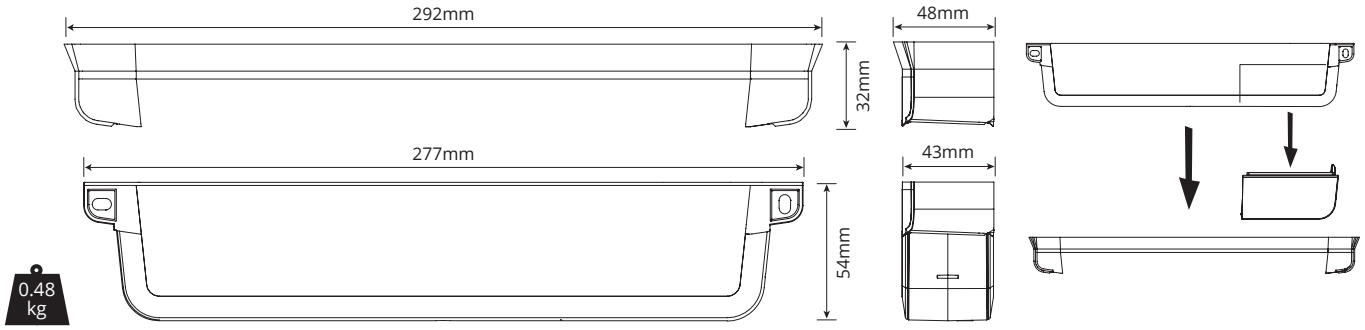


| SPECIFICATIONS | |
|---|---|
| Max. flow | 45L/h @ 0m head |
| Max. rec. head | 10m |
| Min. dB(A) @ 1m | 16dB(A) |
| Power supply | 230 VAC, 50-60 Hz, 0,18 A, 2.1 W |
| Rated | Continuous |
| Class | II |
| Max. unit output | 16kW (54,000Btu/h) |
| Max. ambient temp | 40°C (104°F) |
| IP Protection | IP24 |
| Inlet o/d | 16mm (5/8") – 26mm (1") |
| Outlet o/d | Ø6mm (1/4") |
| Safety switch | 5.0 A NO & NC contacts |
| Thermal protection | ✓ |
| Self priming | ✓ |

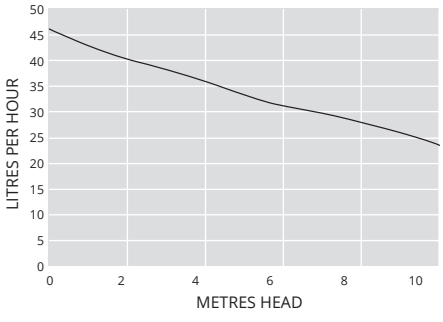


| OPTIONS | |
|---|---|
| Silent+ Mini White (Europe) | FP3450 |

| SUGGESTED ACCESSORIES | | |
|---|---|---|
| Description | | Part No. |
| 1 Amp Fuse |  | FP2620 |
| Tube To Soil Stack Adaptor |  | FP2038 |

### IN THE BOX

Silent+ Mini White pump (incl. hard wired 1m power cable) • Fitting template • Outlet elbow • Screw caps • Spacer • Installation manual

Download manual at aspenpumps.com

Ensure ALL cleaning chemicals are flushed out of the reservoir after use.

Information correct at time of going to press. Not all products are available in all regions.

# Mini Pumps

When it comes to dependable condensate removal, Aspen's Mini Pump range delivers performance you can trust. Designed to suit the majority of HVAC applications, these compact pumps are the go-to choice for installers and engineers who value reliability, ease of installation, and solid performance.



Mini Blanc



Mini Lime™




Mini Aqua™




Mini Orange™

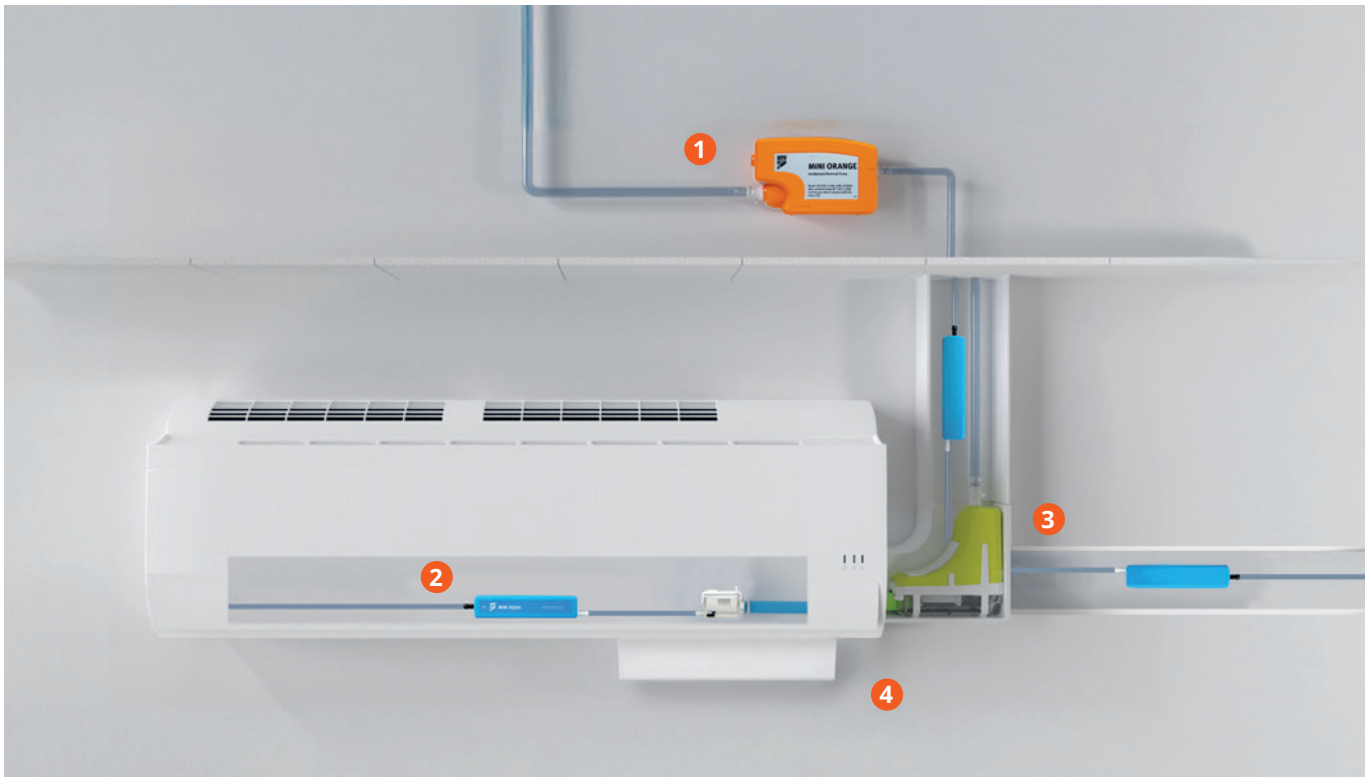


**1** In the ceiling **2** In the AC unit **3** Within the trunking **4** Under the unit

Information correct at time of going to press. Not all products are available in all regions.



# Mini Lime™

## CONDENSATE REMOVAL PUMP

The New Mini Lime is Aspen's all-in-one elbow mini pump. Complete with a 620mm length of EuroSplit trunking – less waste and better value! **Need more trunking options and the world's quietest mini pump? Please see our Silent+ Mini Lime.**

- 20L/h max. flow
- 15m max. rec. head
- 19dB(A) @ 1m

### Key Features

- Plug & Play
- Fits all popular trunking systems
- Quick install
- 2 year warranty

### Suitability

- Up to 26kW / 90,000Btu/h
- High wall split systems
- Left or right install
- ***Perfect for...***
  Commercial and domestic use

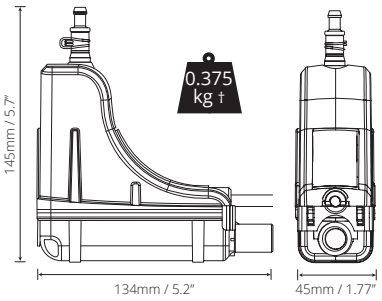


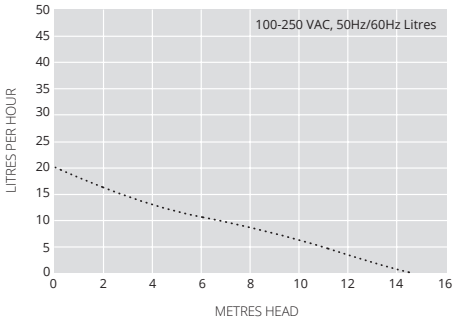


| Univolt 100-250 VAC 50-60Hz | |
|---|---|
| Max. flow | 20L/h @ 0m head |
| Max. rec. head | 15m |
| dB(A) @ 1m | 19 |
| Power supply | 100-250 VAC, 0.18A, 2.1W, 50/60Hz |
| Rated | Continuous |
| Class | II ⧈ |
| Max. unit output | 26kW (90,000Btu/h) |
| Max. ambient temp | 40°C |
| Inlet/Outlet connections | Inlet o/d: Ø16mm<br>Outlet o/d: Ø6mm |
| IP Protection | IP24 |
| Safety switch | 5.0A N.C. (Normally Closed) |
| Self priming | ✓ |

† Pump only – no trunking included.

| SYSTEM OPTIONS | | | |
|---|---|---|---|
| System | | Colour | Part No. |
| EuroSplit (620mm length) |  | ○ Pure White | FP3580 |
| | | ○ Signal White | FP3581 |
| | | ○ Light Ivory | FP3582 |
| | | ● Anthracite | FP3583 |
| | | ● Black | FP3584 |
| Ersatz für Mini Lime† | | | FP3579 |

**For further trunking options, see our Silent+ Mini Lime range.**

| SUGGESTED ACCESSORIES | | |
|---|---|---|
| Description | | Part No. |
| Hose Clamp 10.1 dia. (x10) |  | B3340 |
| S+ Mini Pump spare filters (x10) |  | FP3330 |
| Barbed anti-siphon device |  | FP3336/1 |
| Mini Lime spares kit |  | FP3328 |

### IN THE BOX

Mini Lime pump (including 1.5m Plug & Play cable) • 220mm inlet hose 14mm ID • 40mm Vinyl breather tube 6mm ID • Elbow front and back • 620mm trunking front and back • Ceiling plate • Drain connector kit • Fixing kit • Quick start guide

Download full manual at aspenpumps.com

Watch installation video at aspenpumps.com

Information correct at time of going to press. Not all products are available in all regions.




# Mini Aqua

## CONDENSATE REMOVAL PUMP

Ultra slim. Ultra reliable. The new compact Mini Aqua installs quickly and easily into any unit, with minimal maintenance and maximum versatility. Paired with our compact reservoir, it's one of the smallest condensate pumps on the market – no compromise, no fuss. **Looking for an even quieter pump? Choose Silent+ – the world's quietest range of mini pumps.**

- 20L/h max. flow
- 10m max. rec. head
- 19dB(A) @ 1m*

### Key Features

- **New** ultra slim design!
- **New** compact reservoir!
- High performance
- Plug & Play

### Suitability

- Up to 26kW / 90,000Btu/h
- High wall mini split systems; Ducted units; Floor standing & Chassis units
- ***Perfect for...*** installing directly inside the unit

0.18 kg †

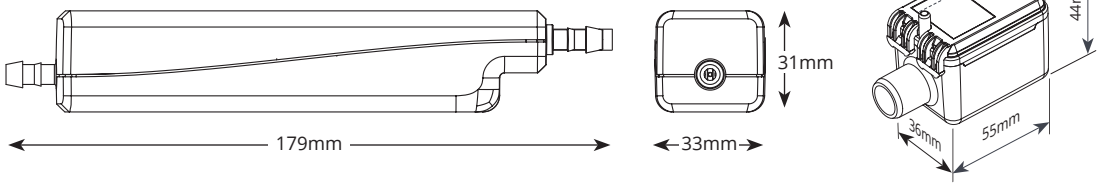





### SPECIFICATIONS

| | |
|---|---|
| Max. flow | 20L/h @ 0m head |
| Max. rec. head | 10m |
| Max. suction lift | 1.5m |
| dB(A) @ 1m | 19dB(A)* |
| Power supply | 100-250VAC, 0.18A, 2.4W, 50.60Hz (provisional) |
| Rated | Continuous |
| Class | II ⧈ |
| Max. unit output | 26kW (90,000 Btu/h) |
| Max. ambient temp | 40°C (104°F) |
| Discharge tube | 6mm ID |
| IP Protection | IP24 |
| Safety switch | 5.0A Normally closed |
| Self priming | ✓ |

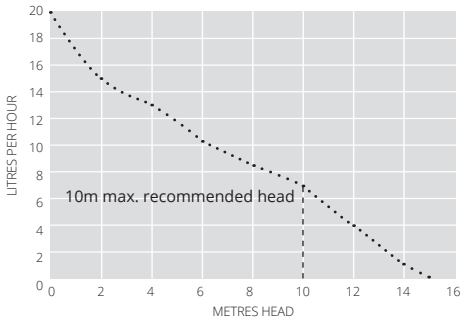


### SUGGESTED ACCESSORIES

| Description | Part No. |
|---|---|
| Hose Clamp 10.1 dia. (x10) | B3340 |
| Compact reservoir filter spares (x10) | FP3618 |
| Barbed anti-siphon device | FP3336/1 |

### OPTIONS

| | |
|---|---|
| Mini Aqua with Compact Reservoir | FP3589 |

Download manual at aspenpumps.com

Installation video at aspenpumps.com

### IN THE BOX

Mini Aqua pump • 1.5m Plug & Play power cable • Compact reservoir (inc. filter & lid) • 150mm Vinyl breather tube • 1.5m Suction tube 6mm ID • 220mm Blue inlet hose 14mm ID • Drain connector kit • Quick Start Guide

Information correct at time of going to press. Not all products are available in all regions.




# Mini Orange™

## CONDENSATE REMOVAL PUMP

The Mini Orange – Aspen as you know it. Quiet, reliable, and built for performance. Designed to fit in ceiling voids or spaces away from the unit, it stays out of sight and out of mind. A trusted all-rounder for standard HVAC applications, backed by a 2-year warranty. **If you're looking for the world's quietest mini pumps, try our Silent+ range, at only 16dB(A).**

- 20L/h max. flow
- 10m max. rec. head
- 19dB(A) @ 1m

### Key Features

- Low maintenance
- Plug & play
- 2 year warranty

### Suitability

- Up to 26kW / 90,000Btu/h
- Ducted units; floor standing & chassis units; high wall split systems
- ***Perfect for...*** small commercial and residential units

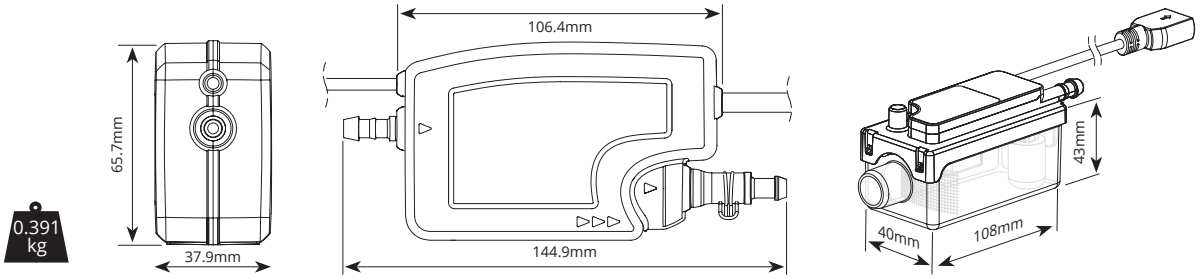


| 100V-250VAC @ 50Hz/60Hz | |
|---|---|
| Max. flow | 20L/h @ 0m head |
| Max. rec. head | 10m |
| Max. suction lift | 1.5m |
| Min. dB(A) @ 1m | 19dB(A) |
| Power supply | 100-250VAC, 0.18A, 2.4W, 50/60 Hz |
| Rated | Continuous |
| Class | II ⧈ |
| Max. unit output | 26kW (90,000Btu/h) |
| Max. ambient temp | 40°C (104°F) |
| IP Protection | IP24 |
| Inlet o/d | Ø16mm (5/8") |
| Outlet o/d | Ø6mm (1/4") |
| Safety switch | 5.0 A Normally closed |
| Self priming | ✓ |

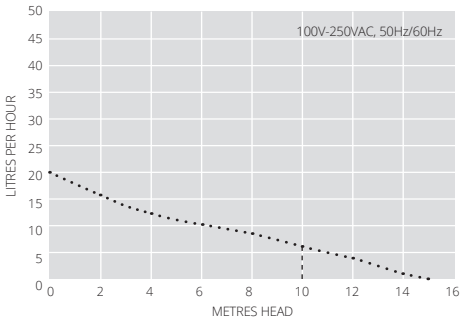


| OPTIONS | |
|---|---|
| Mini Orange | FP3577 |

**IN THE BOX**

Mini Orange pump • Reservoir (inc. filter and lid) • Wall fixing pad • 1.5m Clear PVC tube • 220mm inlet hose • 150mm Clear vent hose • Drain connector kit: straight connector and rubber elbow • Quick Start Guide

| SPARES | | |
|---|---|---|
| Description | | Part No. |
| Hose Clamp 10.1 dia. (x10) |  | B3340 |
| S+ Mini Pump spare filters (x10) |  | FP3330 |
| Barbed anti-siphon device |  | FP3336/1 |
| Reservoir copper mesh filter (x10) |  | FP3460 |
| Universal fixing bracket |  | FP3463 |
| Mini Pump reservoir kit |  | FP3461 |

Download full manual at aspenpumps.com

Watch installation video at aspenpumps.com

Information correct at time of going to press. Not all products are available in all regions.



# Mini Blanc™

## CONDENSATE REMOVAL PUMP

The Mini Blanc is all about neat finishes and easy installs. Stylish and powerful, it mounts directly beneath wall units making it ideal for retrofit installations where aesthetics matter. Backed by Aspen reliability and a 2-year warranty, it's a clean choice for clean lines. **If you're looking for state-of-the-art of pump technology, upgrade to our Silent+ range.**

- 20L/h max. flow
- 10m max. rec. head (flow rate 4L/h)
- 19dB(A) @ 1m

### Key Features

- Fast install
- Easy maintenance access
- Removable reservoir
- Quiet operation
- Elegant and stylish casing
- 2 year warranty

### Suitability

- Up to 26kW / 90,000Btu/h
- High wall split systems
- ***Perfect for...*** Domestic and commercial use – where easy maintenance is key

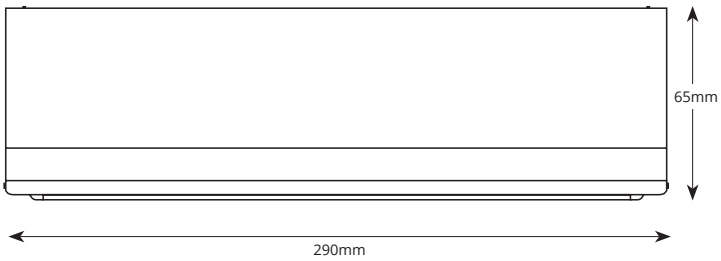


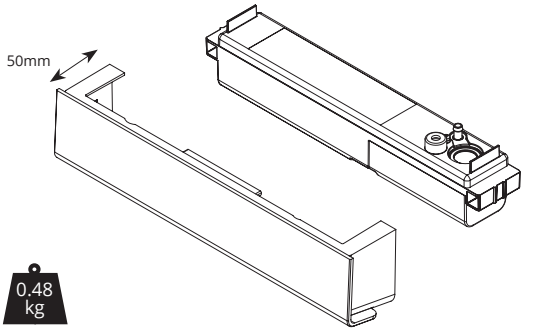


| 100V-250VAC @ 50Hz/60Hz | |
|---|---|
| Max. flow | 20L/h @ 0m head |
| Max. rec. head | 10m |
| dB(A) @ 1m | 19dB(A) |
| Power supply | 230 VAC,50.60Hz, 0.16A / 5W |
| Rated | Continuous |
| Class | II |
| Max. unit output | 26kW (90,000Btu/h) |
| Max. water temp | 40°C (104°F) |
| Inlet/outlet | 20mm in 6mm out |
| IP Protection | IP24 |
| Safety switch | 5A Normally closed |
| Self priming | ✓ |

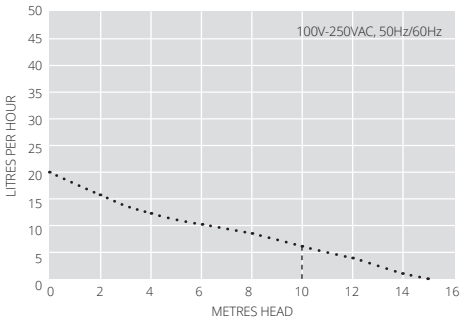


| OPTIONS | |
|---|---|
| Mini Blanc | FP3578 |

**IN THE BOX**

Mini Blanc pump, Hard wired 1.5m power cable
• Fitting template (part of box) • Quick start guide

| SUGGESTED ACCESSORIES | |
|---|---|
| Description | Part No. |
| Mini Blanc 4.5 Foam Filter Spares (x10) | FP3587 |
| Barbed anti-siphon device | FP3336/1 |
| Reservoir copper mesh filter (x10) | FP3460 |

Download full manual at aspenpumps.com

Information correct at time of going to press. Not all products are available in all regions.

# Peristaltic pumps

Our peristaltic pump range is the 'best of the best'. Offering unrivalled remote install possibilities, they can be placed up to 3 metres from the AC unit without affecting performance. Perfect for spaces which require unobtrusive maintenance access (eg hotels, hospitals). Handling dirty water and with the added benefit that they can run dry, our peristaltic pump range is ideal for commercial remote applications.




Ultra Black Air




Ultra Black +




**1** Remote access with minimal disturbance. Pump placed remotely from AC unit eg. above ceiling in hallway of hotel.

Information correct at time of going to press. Not all products are available in all regions.




# Ultra Black Air

## CONDENSATE REMOVAL PUMP

The new Ultra Black Air offers outstanding reliability with an industry first 5 year warranty*. Built upon stepper motor technology and software control, this version offers user programmable speed control to minimise audible noise and tube wear.

- 15 L/h max. flow
- 12m max. head (Flow rate 15 l/h)
- 21 dB(A) @ 1 m

1.12 kg

## Key Features

- 5 year warranty*
- Configurable motor speed
- Flexible Installation with outstanding lift
- Easy to install with Patented mounting technology

## Suitability

- Up to 20 kW (68 000Btu/h)
- High wall split systems; Ducted units; Floor standing & Chassis units
- ***Perfect for...*** hotel bedrooms and other remote install locations

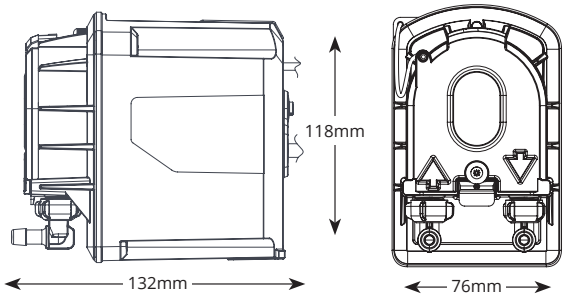


PATENT DESIGN
PERISTALTIC PUMPS & FIXING BRACKET

| @ 230 VAC 50Hz | |
|---|---|
| Max. flow | 15 L/h @ 12m head |
| Max. head | 12m |
| Max. suction lift | 3m |
| dB(A) @1m | 21dB(A) |
| Power supply | 110-230 VAC, 0.2A, 50/60Hz |
| Rated | Continuously |
| Class | II ⧈ |
| Max. unit output | 20kW (68 000 Btu/h) |
| Max. water output | 40°C (104°F) |
| Inlet/Outlet | 6mm ID |
| IP Protection | IP24 |
| Safety Switch | 5A NC relay |
| Self priming | ✓ |

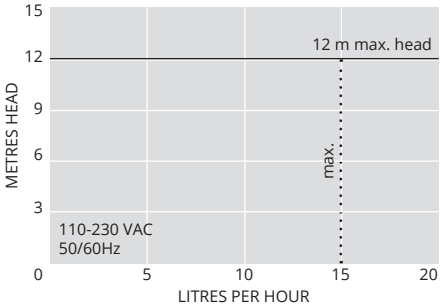


| OPTIONS | |
|---|---|
| Ultra Black Air | FP3390 |

| SUGGESTED ACCESSORIES | | |
|---|---|---|
| Description | | Part No. |
| Peri Spare Tube Kit |  | FP3394 |
| 1 Amp Fuse |  | FP2620 |
| Tube Soil Stack Adaptor |  | FP2038 |

**IN THE BOX**

Ultra Black Air Condensate Removal Pump • 3m Plug & Play Power/Sensor Cable • Wall Mounted Bracket • Fixing Kit • Installation Manual

Download manual at aspenpumps.com

Information correct at time of going to press. Not all products are available in all regions.






# Ultra Black +

## FLOAT BASED CONDENSATE REMOVAL PUMP

The new Ultra Black + pump offers outstanding reliability with an industry first 5 year warranty*. Built upon stepper motor technology and software control, this version offers smart pumping technology similar to the latest mini pumps, always minimising audible noise and tube wear.

- 15L/h max. flow
- 12m max. head
- 21 dB(A) @ 1m

1.12 kg

### Key Features

- 5 year warranty*
- Configurable motor speed
- Flexible Installation with outstanding lift
- Easy to install with Patented mounting technology

### Suitability

- Up to 20 kW (68 000Btu/h)
- High wall split systems; Ducted units; Floor standing & Chassis units
- ***Perfect for...*** hotel bedrooms and other remote install locations

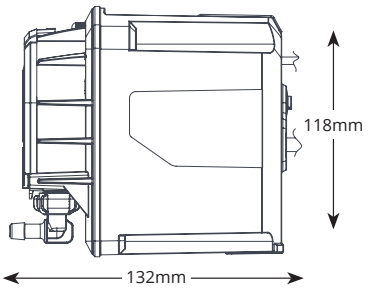


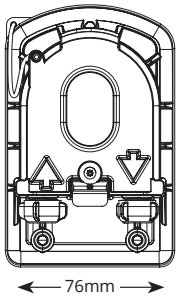


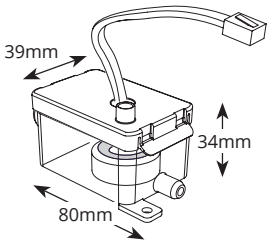


PATENT DESIGN
PERISTALTIC PUMPS & FIXING BRACKET

| @ 230 VAC 50Hz | |
|---|---|
| Max. flow | 15 L/h @ 12m head |
| Max. head | 12m |
| Max. suction lift | 3m |
| dB(A) @1m | 21dB(A) |
| Power supply | 110-230 VAC, 0.2A, 50/60Hz |
| Rated | Continuously |
| Class | II ⧈ |
| Max. unit output | 20kW (68 000 Btu/h) |
| Max. water output | 40°C (104°F) |
| Inlet/Outlet | 6mm ID |
| IP Protection | IP24 |
| Safety Switch | 5A NC relay |
| Self priming | ✓ |

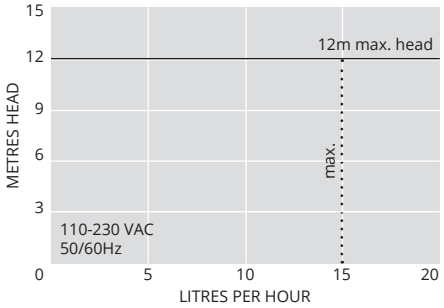


| OPTIONS | |
|---|---|
| Ultra Black + | FP3391 |

| SUGGESTED ACCESSORIES | | |
|---|---|---|
| Description | | Part No. |
| Peri Spare Tube Kit |  | FP3394 |
| 1 Amp Fuse |  | FP2620 |
| Tube Soil Stack Adaptor |  | FP2038 |

**IN THE BOX**

Ultra Black + Condensate Removal Pump • 3m Plug & Play Power/Sensor Cable • Wall Mounted Bracket • Fixing Kit • Installation Manual

Download manual at aspenpumps.com

Information correct at time of going to press. Not all products are available in all regions.

# Tank pumps

Our tank pump range is designed with you, the installer in mind.
Easy to install and maintain, with features including easy clean tank, Plug & Play, twist & click non return valve and built in spirit level. When time is precious, Aspen tank pumps are installer friendly with unsurpassed performance as standard.



Mini Tank



Max Hi-Flow



Hi-Lift 1L & 2L

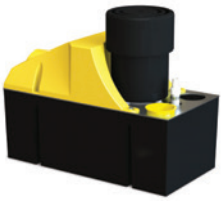

Heavy Duty 6 & 10



Hot Water Pumps

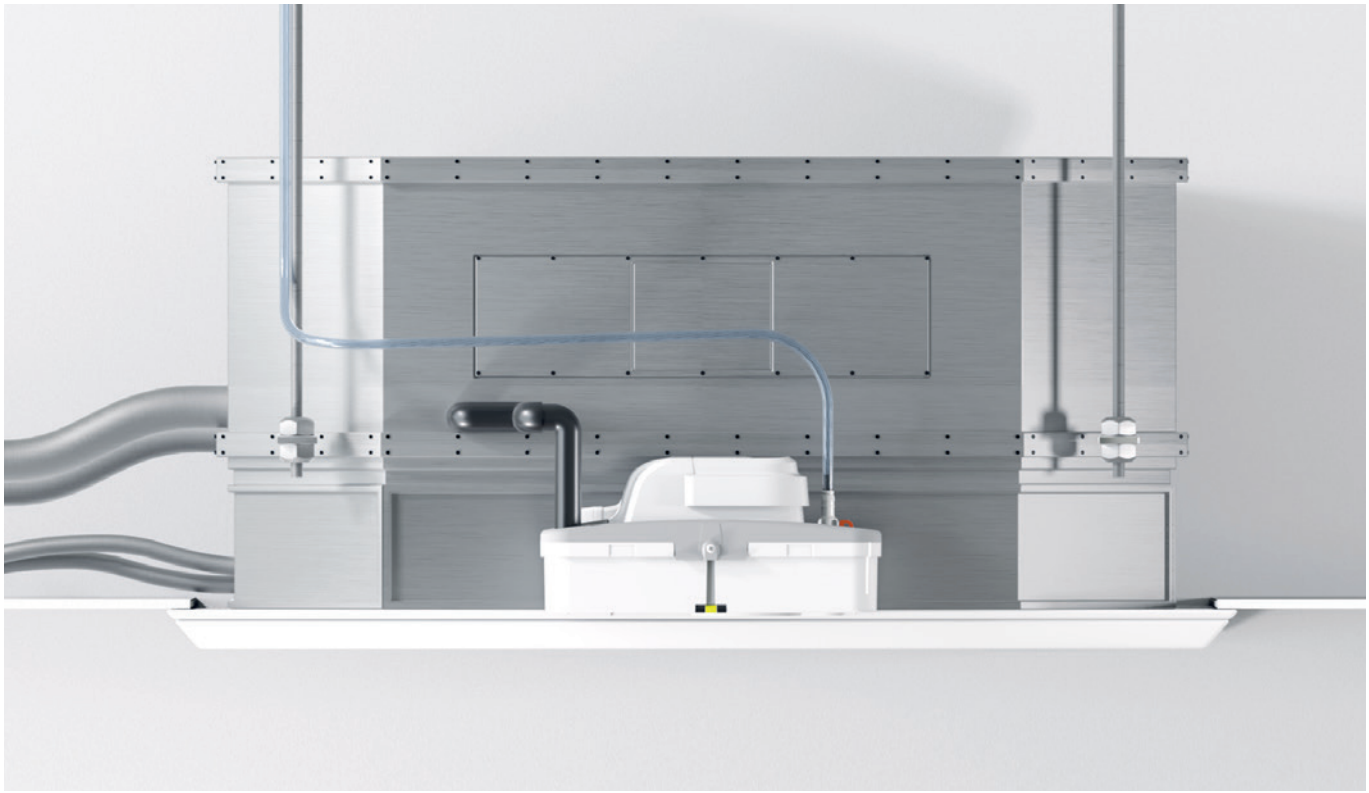

Max Hi-Flow screw mounted to cassette unit

Information correct at time of going to press. Not all products are available in all regions.



# Mini Tank

## CONDENSATE REMOVAL PUMP

The new and improved Mini Tank pump can be wall mounted, floor mounted, in-pan or suspended on M8 / M10 rod. Using piston technology this is a compact, powerful and multi functional tank pump.

35L/h max. flow

15m max. rec. head (flow rate 10L/h)

### Key Features

- Four ways to install
- Compact & discreet
- Can be located in drain pan
- Easy maintenance

### Suitability

- Up to 46kW (157,000 Btu/h)
- Ducted units; Cassette units
- ***Perfect for...*** Installation versatility

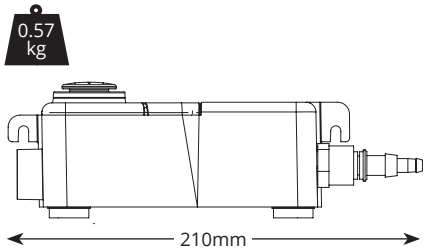


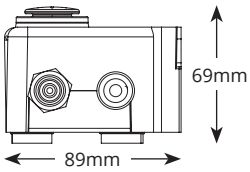


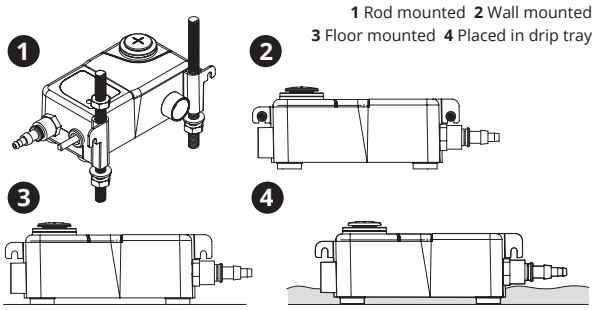


| @ 230 VAC 50Hz | |
|---|---|
| Max. flow | 35L/h @ 0m head |
| Max. rec. head | 15m |
| Tank capacity | 0.24L |
| dB(A) @ 1m | 35dB(A) |
| Power supply | 230 VAC, 50-60Hz, 0.1A |
| Rated | Non continuous |
| Class | II |
| Max. unit output | 46kW (157,000 Btu/h) |
| Max. water temp | 40°C (104°F) |
| Inlets | x2 22mm, 12mm, 27mm |
| Outlets | 6mm & 10mm |
| IP Protection | IP65 |
| Safety switch | 3.0A Normally closed |
| Thermal protection | ✓ |
| Fully potted | ✓ |
| Self priming | n/a |

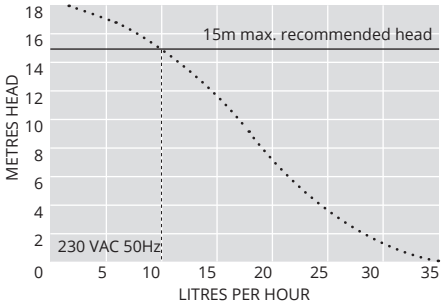


| SUGGESTED ACCESSORIES | | |
|---|---|---|
| Description | | Part No. |
| Tank pump connector 16mm–21mm |  | FP2011 |
| Tube To Soil Stack Adaptor |  | FP2038 |
| Vinyl Tube Braided 1/4" (6mm) |  | AX5100 |

| OPTIONS | |
|---|---|
| Mini Tank | FP1056/2 |

### IN THE BOX

Mini Tank pump (including hard wired 1m power cable) • x2 Rubber adaptors (21.5mm & 31mm) • Anti siphon device • Fixing kit • Install manual

Download manual at aspenpumps.com

Watch installation video at aspenpumps.com

Information correct at time of going to press. Not all products are available in all regions.



The lowest dB(A) & best IP rating (IP24) of any tank pump, the Max Hi-Flow is the quietest and best pump in its class.

Information correct at time of going to press. Not all products are available in all regions.



# MAX Hi-Flow

## CONDENSATE REMOVAL PUMP

The best in class Max Hi-Flow tank pump carries on the Aspen Pumps tradition of build quality & high performance. With the lowest dB(A) rating & best IP rating (IP24 splash proof) of any tank pump, the Max Hi-Flow is the quietest & best pump in its class.

550 L/h max. flow

5m max. rec. head (flow rate 55L/h)

### Key Features

- IP24 – Splash proof
- Easy access tank
- Built in spirit level
- Plug & Play

### Suitability

- Up to 733kW (2.5m Btu/h)
- Ducted units; Floor standing & Chassis units; Cassette units
- ***Perfect for...*** Large commercial units

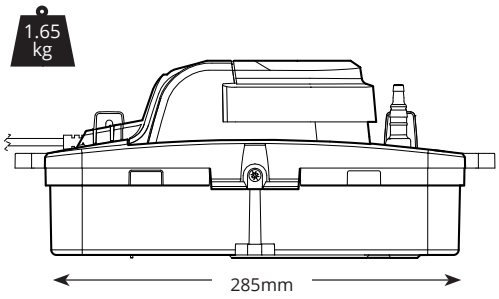


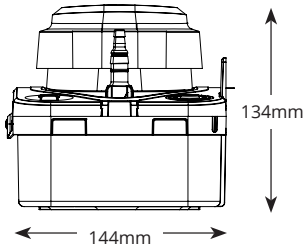


Non-return valve can be cut from 6mm to 10mm (see graphs below)

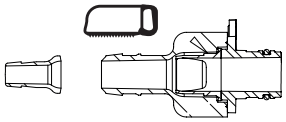

| @ 230 VAC 50HZ | |
|---|---|
| Max. flow | 550L/h @ 0m head |
| Max. rec. head | 5m |
| Tank capacity | 1,7L |
| dB(A)@1m | 44dB(A) |
| Power supply | 230 VAC, 0.8A, 50Hz |
| Rated | Non Continuous |
| Class | I |
| Max. unit output | 733kW (2.5m Btu/h) |
| Max. water temp | 40°C (104°F) |
| Inlets | x4 21–27mm |
| Outlets | 6mm & 10mm |
| IP Protection | IP24 |
| Safety switch | 3A Normally closed |
| Thermal protection | ✓ |
| Fully potted | n/a |
| Self priming | n/a |

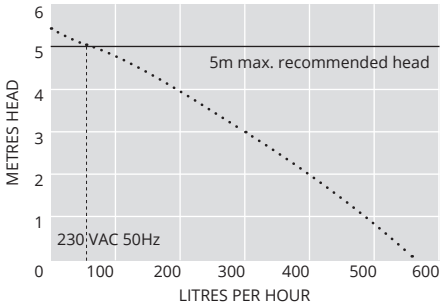


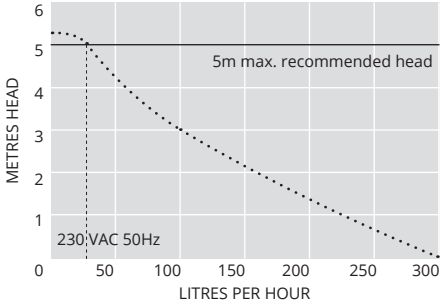


| OPTIONS | |
|---|---|
| Max Hi-Flow | FP3349 |

| SUGGESTED ACCESSORIES | | |
|---|---|---|
| Description | | Part No. |
| Rubber adaptor |  | FP2013 |
| Rigid pipe 15mm / 3/4" |  | B7501 |
| Hose to waste |  | FP2038 |
| Max Hi-Flow Insulation Sleeve |  | AX2500 |

**IN THE BOX**

Max Hi-Flow tank pump • Plug & Play power cable • Fixing kit incl. rod mount and wall mount clips • Install manual

Download manual at aspenpumps.com

Watch installation video at aspenpumps.com

Information correct at time of going to press. Not all products are available in all regions.



# Hi-Lift 1L & 2L

## CONDENSATE REMOVAL PUMP

The world's only persitaltic tank pump offers unsurpassed high head and unmatched reliability.

11L/h max. flow

12m max. head (flow rate 11L/h)

### Key Features

- High head
- Easy fit & maintenance
- Easy access clean tray
- Built in spirit level

### Suitability

- Up to 14kW (47,000 Btu/h)
- Ducted units; Floor standing & Chassis units; Cassette units; Refrigerated units/cold store
- ***Perfect for...*** High head applications

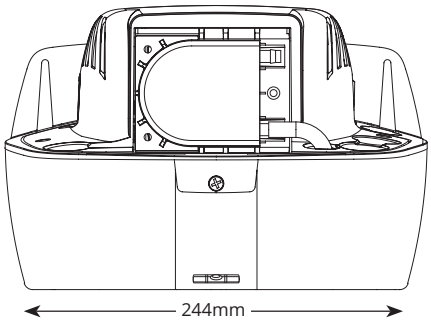


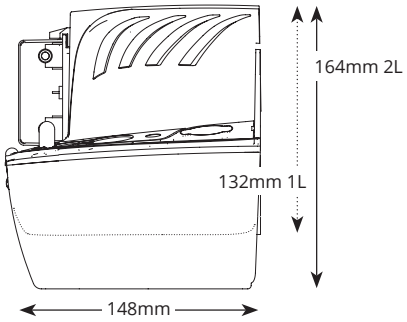


1.75 kg 1L

1.80 kg 2L

| @ 230 VAC 50Hz | |
|---|---|
| Max. flow | 11L/h @ 0m head |
| Max. head. | 12m |
| Tank capacity | 1L & 2L |
| dB(A) @1m | 51dB(A) |
| Power supply | 230 VAC, 50-60Hz, 0.4A |
| Rated | Continuously |
| Class | I |
| Max. unit output | 14kW (47,000 Btu/h) |
| Max. water output | 40°C (104°F) |
| Inlet/Outlet | 3x 25mm in, 6mm out |
| IP Protection | IP20 |
| Safety Switch | 3.0A Normally closed |
| Thermal protection | ✓ |
| Fully potted | n/a |
| Self priming | n/a |

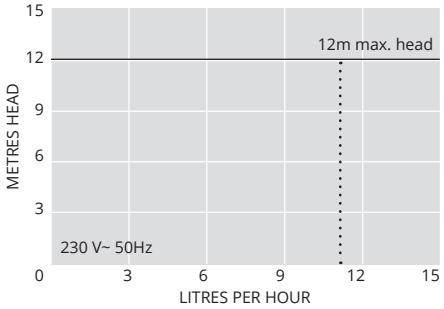


| OPTIONS | |
|---|---|
| Hi-Lift 1L | FP2099/2 |
| Hi-Lift 2L | FP2071/2 |

| SUGGESTED ACCESSORIES | | |
|---|---|---|
| Description | | Part No. |
| Tank pump connector 16mm–21mm |  | FP2011 |
| Tube To Soil Stack Adaptor |  | FP2038 |
| Vinyl Tube Braided 1/4" (6mm) |  | AX5110 |

**IN THE BOX**

Hi-lift 1L or 2L pump • 2m Plug & Play power cable • Fixing kit • Install manual

Download manual at aspenpumps.com

Information correct at time of going to press. Not all products are available in all regions.



# Heavy Duty 6 & 10

## CONDENSATE REMOVAL PUMP

The Heavy Duty condensate removal pump is designed for high-demand HVAC systems, handling large condensate loads with quiet, reliable operation. Built to withstand the toughest commercial and industrial environments. These pumps are easy to install and combines power, reliability and durability.

HD6: Max. flow 900 l/h
HD10: Max. flow 1070 l/h

HD6: 6m max. rec. head (flow rate 180L/h)
HD10: 9m max. rec. head (flow rate 100L/h)

### Key Features

- High flow rate
- Non return valve
- Easy installation
- 4 litre tank capacity
- High level safety switch

### Suitability

- HD6: Up to 1200 kW (4m Btu/h)
  HD10: Up to 1460 kW (4.9m Btu/h)
- Dehumidifiers; Air handling units (AHUs)
- ***Perfect for...*** Large volumes of water

5.2 kg

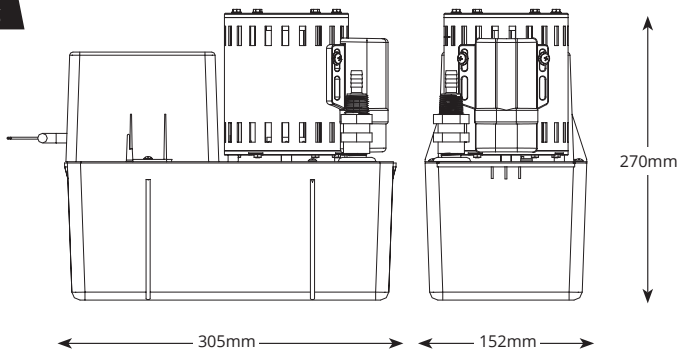




Heavy Duty 6

Heavy Duty 10

| HEAVY DUTY 6 & 10 @ 230 VAC 50Hz | |
|---|---|
| Max. flow | HD6: 900 L/h, HD10: 1070 L/h |
| Max. rec. head | HD6: 6m, HD10: 9 m |
| Tank capacity | 4L |
| Sound level@1m | HD6: 64dB(A), HD10: 64dB(A) |
| Power supply | HD6: 230 VAC, 50Hz, 1.1A<br>HD10: 230 VAC, 50Hz, 1.1A |
| Rated | HD6: Continuous<br>HD10: Continuous |
| Class | I Appliance |
| Max. unit output | HD6: 1200kW (4m Btu/h)<br>HD10: 1460kW (4.9m Btu/h) |
| Max. ambient temp | 40°C (104°F) |
| Max. water temp | 40°C (104°F) |
| Inlet/Outlet | 40mm in, 10mm out |
| IP Protection | IP20 |
| Safety Switch | 5.0A Normally closed |

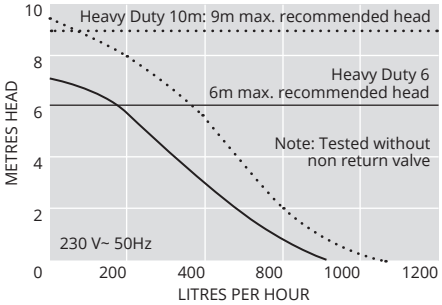


| SUGGESTED ACCESSORIES | | |
|---|---|---|
| Description | | Part No. |
| Rubber Adaptors 3/4" (19mm) - 1 1/2" (38mm |  | FP2007 |
| Tube to Soil Stack Adaptor |  | FP2038 |
| Vinyl Tube Braided 3/8" (10 mm) |  | AX5101 |

| OPTIONS | |
|---|---|
| Heavy Duty 6 | FP2074/3 |
| Heavy Duty 10 | FP2066/3 |

**IN THE BOX**

Heavy Duty 6 or 10 pump • Hard wired 2m power cable • Install manual

Dowload manual at aspenpumps.com

Information correct at time of going to press. Not all products are available in all regions.



# Hot Water Economy

## CONDENSATE REMOVAL PUMP

The Hot Water Economy pump ensures efficient, quiet operation at high temperatures, handling demanding applications with ease. Built to withstand water temperatures up to 100°C, it's ideal for industrial and commercial air handling units.

900L/h max. flow

6m max. rec. head (flow rate 280L/h)

### Key Features

- High performance
- Handles 100°C water
- High level safety switch
- 40mm inlet

### Suitability

- Up to 1200kW / 4m Btu/h
- Humidifiers; refrigeration; air handling units (AHUs)
- ***Perfect for...*** Humidifiers

5.2 kg

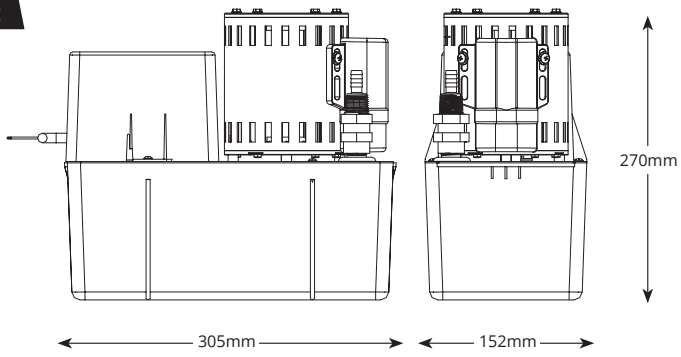


| HOT WATER ECONOMY @ 230 VAC 50Hz | |
|---|---|
| Max. flow | 900L/h |
| Max. rec. head | 6m |
| Tank capacity | 4L |
| Sound level@1m | 64dB(A) |
| Power supply | 230 VAC 50Hz 1.1A |
| Rated | Continuous |
| Class | I appliance |
| Max. ambient temp | 40°C / 104°F |
| Max. water temp | 100°C / 212°F |
| Inlet/outlet | 40mm in,10mm out |
| IP Protection | IP20 |
| Safety switch | 5.0A Normally closed |

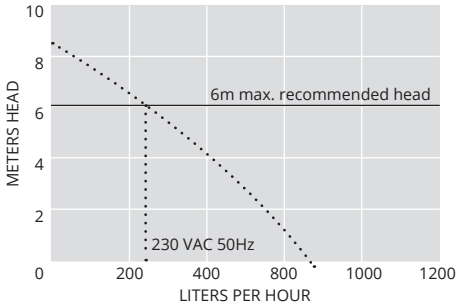


| SUGGESTED ACCESSORIES | | |
|---|---|---|
| Description | | Part No. |
| Rubber Adaptor 3/4" (19mm) – 1 1/2" (38mm) |  | FP2007 |
| Tube To Soil Stack Adaptor |  | FP2038 |
| Vinyl Tube Braided 3/8" (10mm) |  | AX5111 |

| HOT WATER ECONOMY OPTIONS | |
|---|---|
| Hot Water Economy | FP2092/3 |

**IN THE BOX**

Hot Water Economy Pump • Hard wired 2m power cable • Install manual

Download manual at aspenpumps.com

Information correct at time of going to press. Not all products are available in all regions.

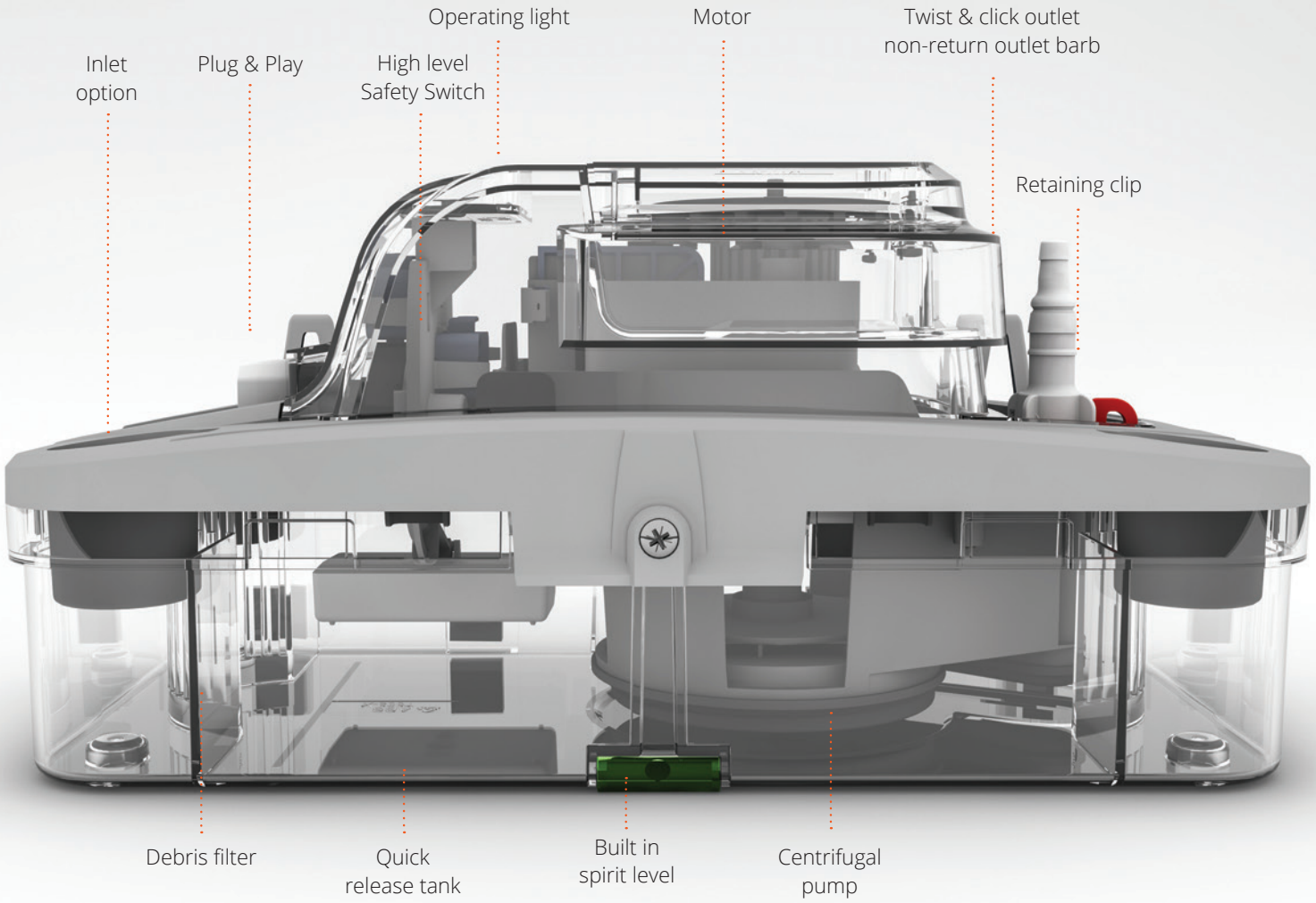


# THE PROFESSIONAL WAY

So why should you choose a condensate pump? Traditionally, removing condensate water from an air conditioning unit is an inflexible and often unattractive challenge.

## Installation

We understand that flexibility is key when considering your installation. Gravity drainage can often bring limitations on placement of the unit – indoor or outdoor. Condensate removal pumps allow optimum positioning and aesthetics in any installation, without losing out on efficiency or performance. Aspen Pumps give ultimate installation flexibility whatever the application.

## The only option

Sometimes gravity drainage just isn't an option. Removal of condensate water in spaces such as basements, shallow ceiling voids and glass buildings never need to be a problem again. Maintenance is easy, and with a wide range of pumps to choose from, service, relocation or replacement is stress-free. As engineers, we understand that your time is precious, so we take the time to get it right for you.

## A professional install

Condensate removal pumps ensure a professional, aesthetically pleasing installation every time. With easy access for maintenance, a pump ensures that air conditioning units are placed where requested with no unsightly pipework. The condensate water can be effectively managed to the relevant source such as a soil stack or grey water tank, ensuring a professional finish everytime.

Information correct at time of going to press. Not all products are available in all regions.

# Supermarket Pumps

Designed for retail chiller cabinets, this range of pumps is extremely easy to install and maintain. Placed directly below the refrigeration unit they remove water during the defrost cycle. The Hi Capacity11L, Compact 4L ERRP & Low Profile Cold Cabinet both feature a unique debris filter, whilst the Macerator features a filter blade to stop the pumps from clogging with food debris.




Hi Capacity 11L ERRP




Compact 4L ERRP



Low Profile Cold Cabinet



Macerator 4L



All our refrigeration pumps simply fit beneath the refrigeration unit

Information correct at time of going to press. Not all products are available in all regions.

RETRO-FIT CONNECTIVITY*
Every unit. Total visibility.

Modbus: FP3555



# High Capacity 11L ERRP

## CONDENSATE REMOVAL PUMP

Our High Capacity 11L Economy Retail Refrigeration Pump has a large tank size, yet with same low profile as our Compact 4L – just 75mm! Meeting today's demands of modern refrigeration units. Effectively pumping away defrost and contaminated water.

230 L/h max. flow

35m max. head

### Key Features

- Only 75mm height
- 2 stage filter to catch debris and prevent spread and growth of biofilm
- Low voltage at point of use
- Plug & Play

### Suitability

- Refrigeration units; cold store cabinets
- ***Perfect for...***
  Multiple refrigeration units



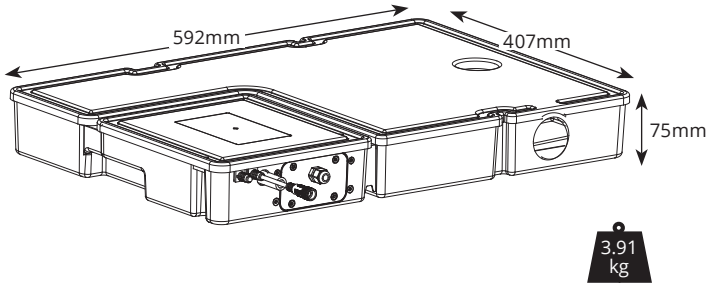


| @ 230 VAC 50Hz | |
|---|---|
| Max. flow | 230 L/h @ 0 head |
| Max. rec. head | 35m |
| Tank capacity | 11.1L |
| Sound level @ 1m | 60 dB(A) |
| Power supply Input: | 100~240V AC 50/60Hz |
| Rated | Non continuous |
| Class | II appliance |
| Max. ambient temp. | 40°C / 104°F |
| Inlet/Outlet | 40mm in, 10mm out |
| IP Protection | IPX4 |
| Safety Switch | 3A NC/NO |
| Thermal protection | ✓ |
| Flammable refrigerant compatibility | Designed to minimise spark risk |
| Equipment communication | Modbus RTU (option extra: FP3555) |

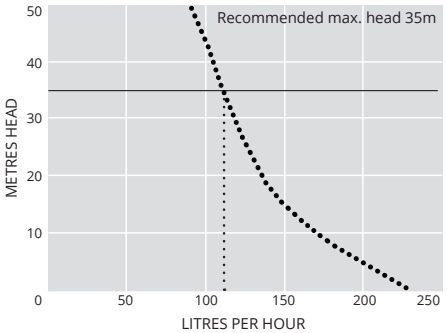


| SUGGESTED ACCESSORIES | | |
|---|---|---|
| Description | | Part No. |
| Vinyl Tube Braided 3/8" (10 mm) |  | AX5101 |
| Jallystrips |  | S010371 |

| OPTIONS | |
|---|---|
| Side inlet | FP3552 |
| Top inlet | FP3553 |

Download manual at aspenpumps.com

**IN THE BOX**

ERRP pump • 2m Plug & Play power cable • 11/2" BSP connector (for 40mm ID waste pipe) • Install manual

Information correct at time of going to press. Not all products are available in all regions.

RETRO-FIT CONNECTIVITY*
Every unit. Total visibility.

Modbus: FP3555



# Compact 4L ERRP

## CONDENSATE REMOVAL PUMP

Our Compact 4L Economy Retail Refrigeration Pump is designed exclusively to fit underneath retail refrigeration cabinets allowing for the removal of defrost and contaminated water.

190L/h max. flow

35m max. head

### Key Features

- Lightweight & slim
- Low voltage at point of use
- 2-stage filter to prevent growth and spread of biofilm
- Plug & Play

### Suitability

- Refrigeration units; cold store cabinets
- ***Perfect for...*** Single & multiple refrigeration units



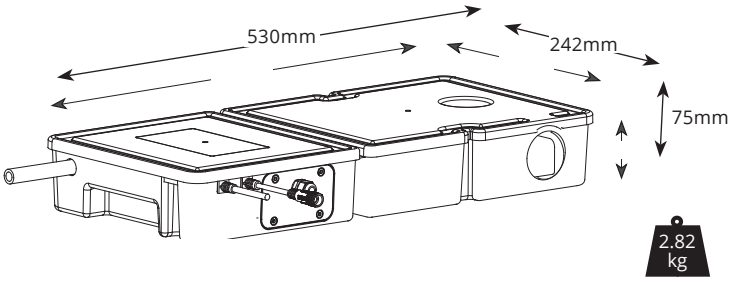


| @ 230 VAC 50Hz | |
|---|---|
| Max. flow | 190 L/h @ 0 head |
| Max. rec. head | 35m |
| Tank capacity | 4.2L |
| Sound level @ 1m | 60 dB(A) |
| Power supply Input: | 100~240V AC 50/60Hz |
| Rated | Non continuous |
| Class | II appliance ⧈ |
| Max. ambient temp. | 40°C / 104°F |
| Inlet/Outlet | 40mm in, 10mm out |
| IP Protection | IPX4 |
| Safety Switch | 3A NC/NO |
| Thermal protection | ✓ |
| Flammable refrigerant compatibility | Designed to minimise spark risk |
| Equipment communication | Modbus RTU (option extra: FP3555) |

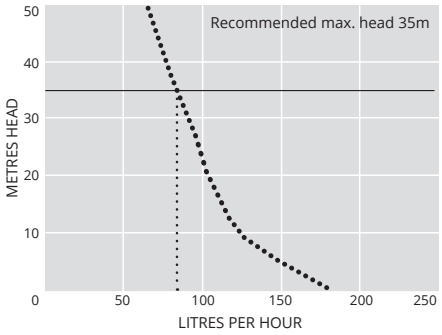


| OPTIONS | |
|---|---|
| Side inlet | FP3550 |
| Top inlet | FP3551 |

Download manual at aspenpumps.com

| SUGGESTED ACCESSORIES | | |
|---|---|---|
| Description | | Part No. |
| Vinyl Tube Braided 3/8" (10 mm) |  | AX5101 |
| Jallystrips |  | S010371 |

### IN THE BOX

Low Profile ERRP pump • 2m Plug & Play power cable • 11/2" BSP connector (for 40mm ID waste pipe) • Install manual

Information correct at time of going to press. Not all products are available in all regions.

# Low Profile Cold Cabinet



## CONDENSATE REMOVAL PUMP

Made from robust stainless steel, this pump is extremely easy to install and maintain. With a feature designed to keep waterways moving, reducing the opportunity for biofilm to settle, the pump is placed directly below retail refrigeration cabinets removing condensate during the defrost cycle.

700L/h max. flow

20m max. head
(Flow rate 10 L/h)

### Key Features

- Integrated jet flow dispersal system to reduce biofilm build up
- Robust, abrasion resistant stainless steel casing
- Multiple inlets for flexible installation (top, end & boths sides)
- Removable barbed brass oulet connector for ease of maintenance

### Suitability

- Shallow 75mm height, lower than traditional dairy units
- Single and multiple refrigeration units, OEM
- ***Perfect for...*** multiple refrigeration units with shallow access

4.8 kg

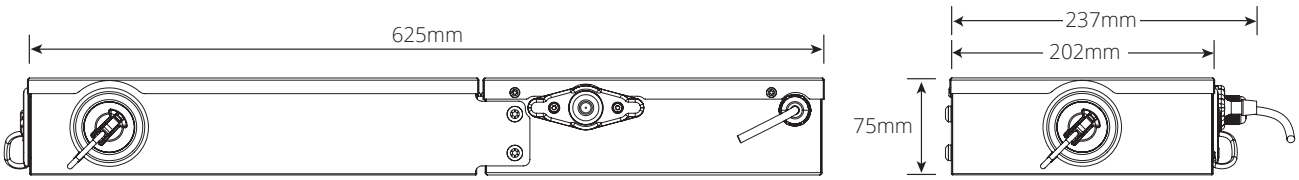


| @ 230 VAC 50Hz | |
|---|---|
| Max. flow | 700L/h @ 0m head |
| Max. head | 20m (Max. rec. 18m) |
| Tank capacity | 4.6L |
| dB(A) @1m | 60 |
| Power supply | 230 VAC, 0.6A, 50/60Hz |
| Rated | Non continuous |
| Class | I |
| Max. unit output | 1.59m Btu/h – 460kW |
| Max. water output | 40°C / 104°F |
| Inlet/Outlet | 4x ø48mm holes with plugs with 3x inlet plugs assembles |
| IP Protection | IP44 |
| Safety Switch | 1A Normally closed |
| Thermal protection | ✓ |
| Fully potted | n/a |
| Self priming | n/a |

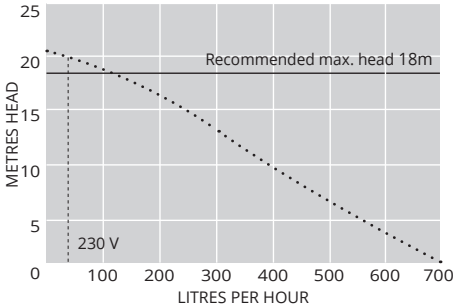


| SUGGESTED ACCESSORIES | | |
|---|---|---|
| Description | | Part No. |
| 1 Amp Fuse |  | FP2620 |
| Tube to Soil Stack Adaptor |  | FP2038 |
| Vinyl Tube Braided 3/8" (10 mm) |  | AX5101 |

| OPTIONS | |
|---|---|
| LP Cold Cabinet – top, end and both side inlets | FP3560 |

**IN THE BOX**

• Low Profile Cold Cabinet pump • 3 x inlet plug assemblies • 1 x inline Non-return valve (NRV) • 1 x 1 1/2" waste connector for 40mm waste pipe • 1 x 3/8"-1/2" outlet pipe adaptor • Install manual

Download manual at aspenpumps.com

Information correct at time of going to press. Not all products are available in all regions.

# Macerator 4L



## CONDENSATE REMOVAL PUMP

The Macerator pump efficiently handles condensate and defrost water from multiple refrigeration units, and will deliver reliable, quiet performance in high-demand commercial environments.

780L/h max. flow

8.5m max. rec. head (flow rate 80L/h)

### Key Features

- Internal filter blade
- High flow & head
- High level safety switch

### Suitability

- Single and multiple refrigeration units
- ***Perfect for...*** handling food waste that may pass through the pump



5.2 kg

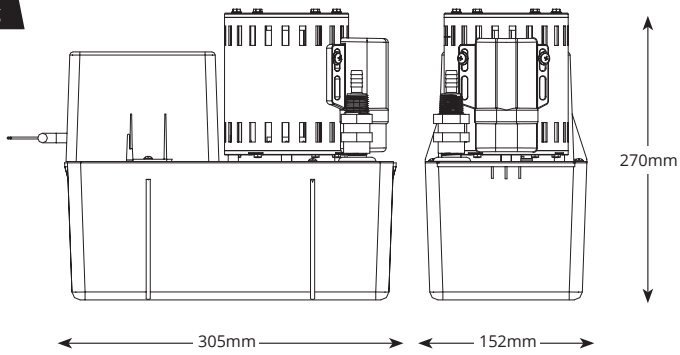


| MACERATOR 4L @ 230 VAC 50-60HZ | |
|---|---|
| Max. flow | 780L/h |
| Max. rec. head | 8.5m |
| Tank capacity | 4L |
| Sound level@1m | 64dB(A) |
| Power supply | 230VAC, 50Hz, 1.1A |
| Rated | Continuous |
| Class | I appliance |
| Max. ambient temp | 40°C/104°F |
| Max. water temp | 40°C/104°F |
| Inlet/outlet | 40mm in,10mm out |
| IP Protection | IP20 |
| Safety switch | 5.0A Normally closed |

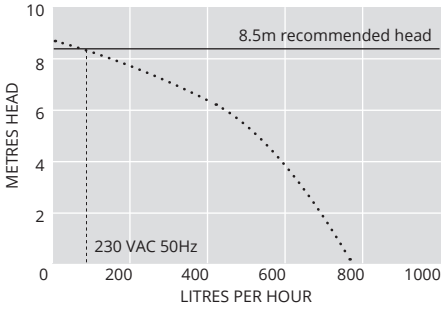


| SUGGESTED ACCESSORIES | | |
|---|---|---|
| Description | | Part No. |
| Vinyl Tube Braided 3/8" (10mm) |  | AX5101 |

| MACERATOR 4L OPTIONS | |
|---|---|
| Macerator 4L | FP2305/3 |

| IN THE BOX |
|---|
| Macerator 4L pump • Hard wired 2m power cable • Install manual |

Download manual at aspenpumps.com

Information correct at time of going to press. Not all products are available in all regions.

# Boiler Pumps

A condensing boiler is a high efficiency boiler that recycles and takes heat from the exhaust gases leaving excess water. Our high performance boiler pumps remove this excess water offering excellent performance, easy inspection and great aesthetics.



Endurance



Kitchen




**1** Kitchen boiler pump wall mounted beneath boiler.

**2** Hi-Capacity boiler pump floor mounted next to floor standing boiler.

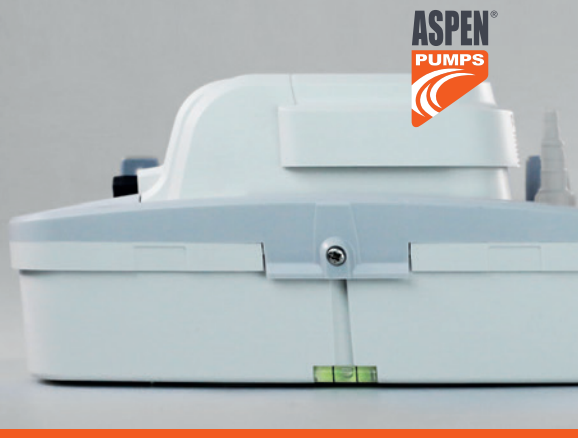

# Endurance

## BOILER CONDENSATE REMOVAL PUMP

The Aspen Endurance has been ruggedised to maximise reliability in boiler applications. Its construction allows short infrequent temperature excursions to 85°C. It can handle pH > 2.2 for applications where a neutraliser is not required.

550 L/h Max. flow

5m max. head
(flow rate 55L/h)

## Key Features

- Stainless steel motor shaft
- Max. working temperature 60°C with short infrequent excursions to 85°C (<5 min)
- Thermally protected maintenance free motor
- IP24 protection against water splashes

## Suitability

- Up to 200 kW / 682,000 Btu/h
- Suitable for acidic condensate with pH >2.2 and <2.2 with neutraliser
- Spirit level for ease of install
- ***Perfect for...*** Larger domestic & commercial condensing boilers

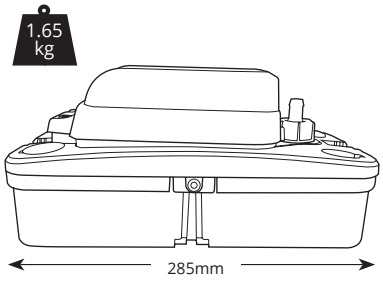


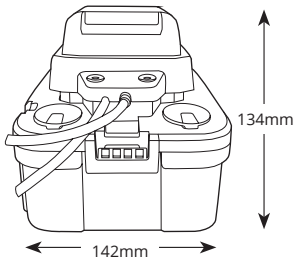


Non-return valve can be cut from 6mm to 10mm (see graphs below)

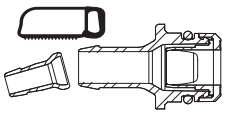

| @ 230 VAC 50Hz | |
|---|---|
| Max. flow | 550 L/h @ 0m head |
| Max. rec. head | 5m |
| Tank capacity | 1.5L |
| dB(A) @1m | 44 dB(A) |
| Power supply | 230 VAC, 50/60Hz, 0.8A |
| Rated | Non continuous |
| Class | I |
| Max. unit output | 200kW (682,000 Btu/h) |
| Max. water output | 60°C (140°F) |
| Inlet/Outlet | x4 21-27mm in 6 & 10mm out |
| IP Protection | IP24 |
| Safety Switch | 3.0A Normally closed |
| Thermal protection | ✓ |

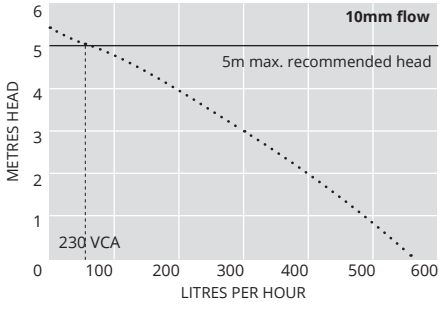


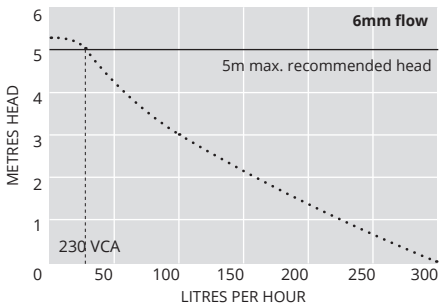


| OPTIONS | |
|---|---|
| Endurance (EU) | FP3500 |
| Endurance (UK) | FP3501 |

| SUGGESTED ACCESSORIES | | |
|---|---|---|
| Description | | Part No. |
| Tube Soil Stack Adaptor |  | FP2038 |
| 1 Amp Fuse |  | FP2620 |
| Vinyl Tube Braided 1/4" (6mm) |  | AX5100 |
| Vinyl Tube Braided 3/8" (10mm) |  | AX5101 |

| IN THE BOX |
|---|
| Endurance pump • Outlet Adapter • Clear PVC hose (6m of 10mm) |

Download manual at aspenpumps.com

Information correct at time of going to press. Not all products are available in all regions.



# Kitchen

## BOILER CONDENSATE REMOVAL PUMP

Designed to take the heat! Extra quick & easy to fit, the Kitchen all-in-one boiler pump is designed to be fitted beneath domestic gas boilers and furnaces.

- 12 L/h max. flow
- 10m max. head (flow rate 4 L/h)
- 21dB(A)

### Key Features

- Compact & discreet
- Mounts under boiler
- Quiet operation
- Clear removable reservoir

### Suitability

- Up to 45kW / 153,000 Btu/h with condensate pH value >2.7
- ***Perfect for...*** Domestic gas fired condensing boilers & furnaces

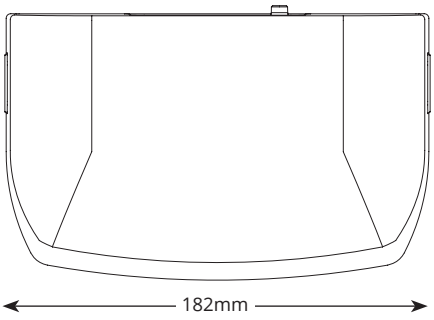


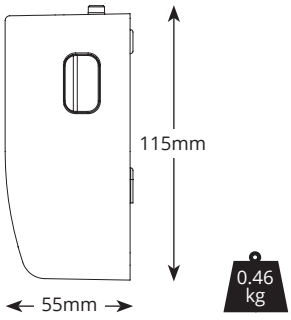


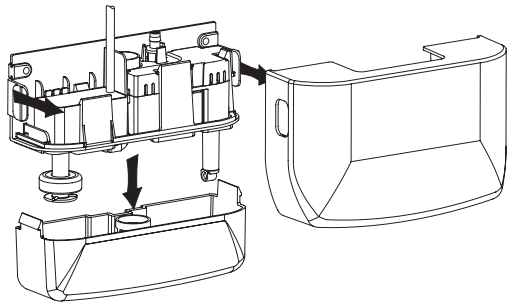

| @ 230 VAC 50Hz | |
|---|---|
| Max. flow | 12L/h @ 0m head |
| Max. rec. head | 10m |
| Tank capacity | 0.24L |
| dB(A) @1m | 21dB(A) |
| Power supply | 230 VAC, 50-60Hz, 0.1A |
| Rated | Non continuous |
| Class | II ⧈ |
| Max. unit output | 45kW (153,000 Btu/h) |
| Max. water output | 60°C (140°F) |
| Inlet/Outlet | 20mm in, 6 mm out |
| IP Protection | IP21 |
| Safety Switch | 3.0A Normally closed |
| Thermal protection | ✓ |
| Fully potted | ✓ |
| Self priming | n/a |

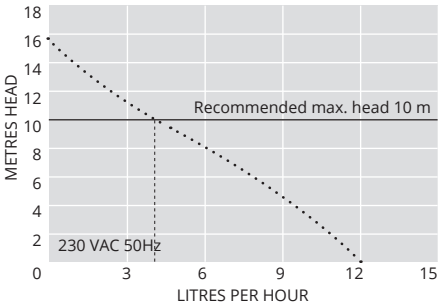


| OPTIONS | |
|---|---|
| Kitchen | FP2943 |

| SUGGESTED ACCESSORIES | | |
|---|---|---|
| Description | | Part No. |
| Tube Soil Stack Adaptor |  | FP2038 |
| 1 Amp Fuse |  | FP2620 |
| Vinyl Tube Braided 3/8" (10 mm) |  | AX5100 |
| Acid Neutraliser |  | FP1021 |

**IN THE BOX**

Kitchen boiler pump (inc. 1m power cable) • 6m discharge tube (6mm ID) • Inlet adaptor for 22 & 28mm pipe • Pipe adaptor • Fixing kit • Install manual

Download manual at aspenpumps.com

Information correct at time of going to press. Not all products are available in all regions.

# Silent+ Mini Pumps

**16** dB(A) — The World's Quietest Mini Pump

Up to **46** kW — One Size Fits All

**3** year warranty — No Maintenance

## "Definitely 'quietly brilliant' 🤫"

**" The new Mini Limes are very very quiet!!!**
Had to pop the cover off to see if it was running!**"**

**" Very impressed at how quiet they are."**



INSTALLATION VIDEOS




Silent+ Mini White
FP3450

Silent+ Mini Aqua
FP3420

Silent+ Mini Orange
FP3430

Silent+ Mini Lime
FP3322/5 (Pump only)

ASPEN PUMPS GROUP

**aspenpumps.com I +44 (0)1323 848842 I sales@aspenpumps.com**

16dB(A) assuming solid wall construction with a 2kW unit



02


| | |
|---|---|
| Hand Tools | 38-51 |
| Cutters | 52-54 |
| Lifters | 55-56 |


# SERVICE & TOOLING

ASPEN PUMPS GROUP




Left to right: JAV-1010, JAV-1015, JAV-1013, JAV-1012,
JAV-1014 Cuts stainless steel up to 3mm thick. Heavy duty with 6 ball bearing rollers
JAV-1011 Ratchet tube cutter set (includes JAV-1010 tube cutter), JAV-1009



Smart spring design



JAV-1011: 2-in-1

# Tube Cutters

JAVAC EDGE 1 PATENTED DESIGN.

All our JAVAC Edge tube cutters feature:

- Titanium plated blade
- Patented Smart Spring Design
- Automatic Cutting. The spring pressure advances the blade when cutting, so there is no need to re-tighten the cutter

| Size | Tube Cutter | Replacement blades (packs of 2) |
|---|---|---|
| 1/8 – 5/8” | JAV-1009 | JAV-1008 |
| 1/8 – 7/8” | JAV-1010 | JAV-1001 |
| 1/8 – 7/8”, | JAV-1011 | |
| 1/8 – 1-1/4” | JAV-1012 | |
| 1/8 – 1-5/8” | JAV-1013 | JAV-1005 |
| 1/4 – 1-1/4” | JAV-1014 | JAV-1006 |
| 3/8 – 2-5-8” | JAV-1015 | JAV-1003 |

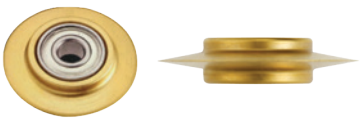

Replacement blades

Information correct at time of going to press. Not all products are available in all regions.






Tube positioning plate

# Eccentric Flaring Tool

JAVAC EDGE 1 5 PATENTED DESIGN.

Avoid leaks, make the perfect flare the easiest way with the Tube Positioning Plate – the plate ensures the tube is set at the correct position

- Hard plastic carry case

| Set options | Part No. |
|---|---|
| 7 Sizes:<br>3/16" 1/4", 5/16", 3/8", 1/2", 5/8", 3/4" | JAV-1024 |
| 7 Sizes: 6, 8, 10, 12, 15, 16, 18mm | JAV-1185 |

# Flare Size Gauge

Designed to measure all flares to offer 100% seal tightness against all flare fittings, a must for every toolbox.

| Description | Part No. |
|---|---|
| Flare Size Gauge | JAV-1022 |



Information correct at time of going to press. Not all products are available in all regions.






# 2-in-1 Flaring & Swaging Tool

JAVAC EDGE 1 5 PATENTED DESIGN.

An easy to use 2-in-1 one design that can be used to flare or swage. Perfect flaring and swaging, less to carry with extra room in the van for more tools!

- Diamond Flaring Cone deburrs and polishes during the flaring process creating an exceptional finished surface, meaning less time deburring
- Patented Diamond Flaring Cone has a unique 'square edge fitting' so when attached the cone is allowed to spin as you turn the handle. Creating a perfectly smooth finish
- Indexing Mechanism Provides accurate alignment when switching between different hole positions on the flaring bar.
- Tube Positioning Plate ensures the tube is set at the correct position for all sizes
- Hard plastic carry case
- Hard drawn copper must be heated prior to use

| Set options | Part No. |
|---|---|
| 6 Sizes: 1/4", 5/16", 3/8", 1/2", 5/8", 3/4" | JAV-1023 |
| 7 Sizes: 6, 8, 10, 12, 15, 16, 18mm | JAV-1184 |

Information correct at time of going to press. Not all products are available in all regions.






Tube positioning plate

# Dual Clutch Eccentric Flaring Tool

JAVAC EDGE 1 5 PATENTED DESIGN.

Dual clutch design. Clutch releases when the flare is complete to prevent over compression

- Drill powered or manual
- Lightweight aluminium body and superior steel core
- Hard plastic carry case

| Description | Part No. |
|---|---|
| 7 sizes:<br>3/16” 1/4”, 5/16”, 3/8”, 1/2”, 5/8”, 3/4” | JAV-1034 |
| 7 Sizes:<br>6, 8, 10, 12, 15, 16, 18mm | JAV-1186 |

Information correct at time of going to press. Not all products are available in all regions.







90° Indicator

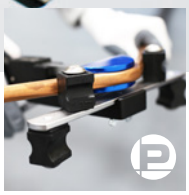

Reverse bending adaptor

# Tube Bender Set

**MULTI SIZE**

JAVAC EDGE 1 5 PATENTED DESIGN.

- Patented 90º Indicator feature so you know when the tube has accurately reached a perfect 90º bend
- Complete with Reversing Adaptors to bend pipe in all directions with ease - perfect for awkward spaces
- 7 x mandrel sizes; 1 x Reverse bending attachment
- Hard plastic carry case
- For use on soft drawn copper only

| Set options | Part No. |
|---|---|
| 7 Sizes: 1/4", 5/16", 3/8", 1/2", 5/8", 3/4", 7/8" | JAV-1021 |
| 7 Sizes: 6, 8, 10, 12, 15, 18, 22mm | JAV-1183 |

**Spares**

| Counterformer | Part No. |
|---|---|
| 1/4 - 3/8" | JAV-9001 |
| 1/2 - 7/8" | JAV-9002 |

| Mandrel | Part No. |
|---|---|
| 1/4" | JAV-1143 |
| 5/16" | JAV-1144 |
| 3/8" | JAV-1145 |
| 1/2" | JAV-1146 |
| 5/8" | JAV-1147 |
| 3/4" | JAV-1148 |
| 7/8" | JAV-1149 |
| 16 mm | JAV-1044 |

Information correct at time of going to press. Not all products are available in all regions.




JAV-1025

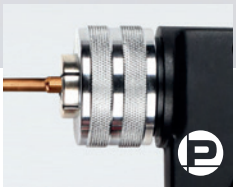

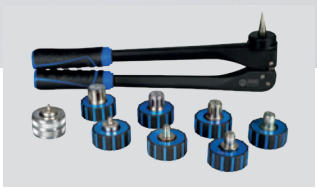

1/4" / 6mm Expander Head*

# Tube Expander Set

**MULTI SIZE**

JAVAC EDGE 1 5 PATENTED DESIGN.

- Patented 1/4" / 6mm Expander Head makes small to large pipework joining installations a breeze
- Hard plastic carry case
- Hard drawn copper must be heated/annealed

| Set options | Part No. |
|---|---|
| 8 Sizes: 1/4", 3/8", 1/2", 5/8", 3/4", 7/8", 1", 1-1/8" | JAV-1025 |
| 8 Sizes: 6, 8, 10, 12, 15, 16, 18, 22mm | JAV-1187 |

**Expander Heads Only**

| Sizes | Part No. |
|---|---|
| 1/4" | JAV-1081 |
| 1/2" | JAV-1080 |
| 3/4" | JAV-1082 |
| 3/8" | JAV-1083 |
| 5/8" | JAV-1084 |
| 7/8" | JAV-1085 |
| 1" | JAV-1088 |
| 1-1/8" | JAV-1086 |
| 1-3/8" | JAV-1054 |
| 1-5/8" | JAV-1055 |

| Sizes | Part No. |
|---|---|
| 6mm | JAV-1188 |
| 8mm | JAV-1189 |
| 10mm | JAV-1190 |
| 12mm | JAV-1191 |
| 15mm | JAV-1192 |
| 16mm | JAV-1193 |
| 18mm | JAV-1194 |
| 22mm | JAV-1195 |
| 25mm | JAV-1196 |
| 28mm | JAV-1197 |

Information correct at time of going to press. Not all products are available in all regions.




# HYDRA-MB7 Hydraulic Bender

JAVAC EDGE 1 5 PATENTED DESIGN.

- Delivers accurate bends for both imperial and metric soft copper pipe
- Ergonomic and robust in design
- Hand wheel hydraulic quick release
- Steel formers and counter formers
- 1/4", 5/16", 3/8", 1/2", 5/8", 3/4", 7/8"
- Quick change between sizes
- Delivered as a complete kit, with spare former and counter formers available
- Hard plastic carry case
- Only for use on soft drawn copper

| Description | Part No. |
|---|---|
| HYDRA-MB7 Hydraulic Bender | JAV-1394 |
| *Kit includes:* *1 x Hydraulic Bender Tool, 1 each of 7 Formers – 1/4", 5/16", 3/8", 1/2", 5/8", 3/4", 7/8" (6mm – 22mm)* | |

| HYDRA-MB7 Spares | Part No. |
|---|---|
| 1/4" Former | JAV-1395 |
| 5/16" Former | JAV-1396 |
| 3/8" Former | JAV-1397 |
| 1/2" Former | JAV-1398 |
| 5/8" Former | JAV-1399 |
| 3/4" Former | JAV-1400 |
| 7/8" Former | JAV-1401 |
| 1/4 – 5/16 Counter Former | JAV-1402 |
| 3/8 – 1/2 – 5/8 Counter Former | JAV-1403 |
| 3/4 – 7/8 Counter Former | JAV-1404 |

Information correct at time of going to press. Not all products are available in all regions.



# HYDRA-XP9 Hydraulic Expander

JAVAC EDGE 1 5 PATENTED DESIGN.

- Universal for imperial and metric pipe
- Single-handed operation
- Compact design permits working in hard to access areas
- Laser-engraved expander heads are easy and quick to identify and attach
- De-burring tool included in the kit
- Angled and ergonomic design requires less effort
- Hard plastic carry case
- Spare heads available
- Only for use on soft drawn copper

| Description | Part No. |
|---|---|
| HYDRA-XP9 Hydraulic Expander – imperial | JAV-1405 |
| *Kit includes: 1 x Hydraulic Expander Tool, 1 x Deburring Tool, 1/4", 3/8", 1/2", 5/8", 3/4", 7/8", 1 1/8", 1 3/8", 1 5/8"* | |
| HYDRA-XP9 Hydraulic Expander – metric | JAV-1434 |
| *Kit includes: 1 x Hydraulic Expander Tool, 1 x Deburring Tool, 1 each of 9 Heads – 6, 10, 12, 16, 18, 22, 28, 35, 42 mm* | |

| | |
|---|---|
| **Dimensions** | L: 250 mm W: 45 mm H: 120 mm |
| **Weight** | 2.6 lbs (1.2 kg) |
| **Suitable for** | Soft pipes only: copper, aluminium, brass |

**Spares**

| Size | Part No. |
|---|---|
| 1/4" | JAV-1406 |
| 3/8" | JAV-1407 |
| 1/2" | JAV-1408 |
| 5/8" | JAV-1409 |
| 3/4" | JAV-1410 |
| 7/8" | JAV-1411 |
| 1 1/8" | JAV-1412 |
| 1 3/8" | JAV-1413 |
| 1 5/8" | JAV-1414 |

| Size | Part No. |
|---|---|
| 6 mm | JAV-1435 |
| 10 mm | JAV-1436 |
| 12 mm | JAV-1437 |
| 16 mm | JAV-1438 |
| 18 mm | JAV-1439 |
| 22 mm | JAV-1440 |
| 28 mm | JAV-1441 |
| 35 mm | JAV-1442 |
| 42 mm | JAV-1443 |

Information correct at time of going to press. Not all products are available in all regions.




JAV-1016 3/8”





Dual hinge design

# Tube Benders

## MULTI SIZE

JAVAC EDGE 1 PATENTED DESIGN.

- Patented Dual Hinge Design – resets the handle position for extra leverage, making the second bend to 180º so simple.
- For use on soft drawn copper only



JAV-1019 3/4”

| Sizes OD | Part No. |
|---|---|
| 3/8” | JAV-1016 |
| 1/2” | JAV-1017 |
| 5/8” | JAV-1018 |
| 3/4” | JAV-1019 |
| 7/8” | JAV-1020 |

| Sizes OD | Part No. |
|---|---|
| 10mm | JAV-1177 |
| 12mm | JAV-1178 |
| 15mm | JAV-1179 |
| 16mm | JAV-1180 |
| 18mm | JAV-1181 |
| 22mm | JAV-1182 |

Information correct at time of going to press. Not all products are available in all regions.

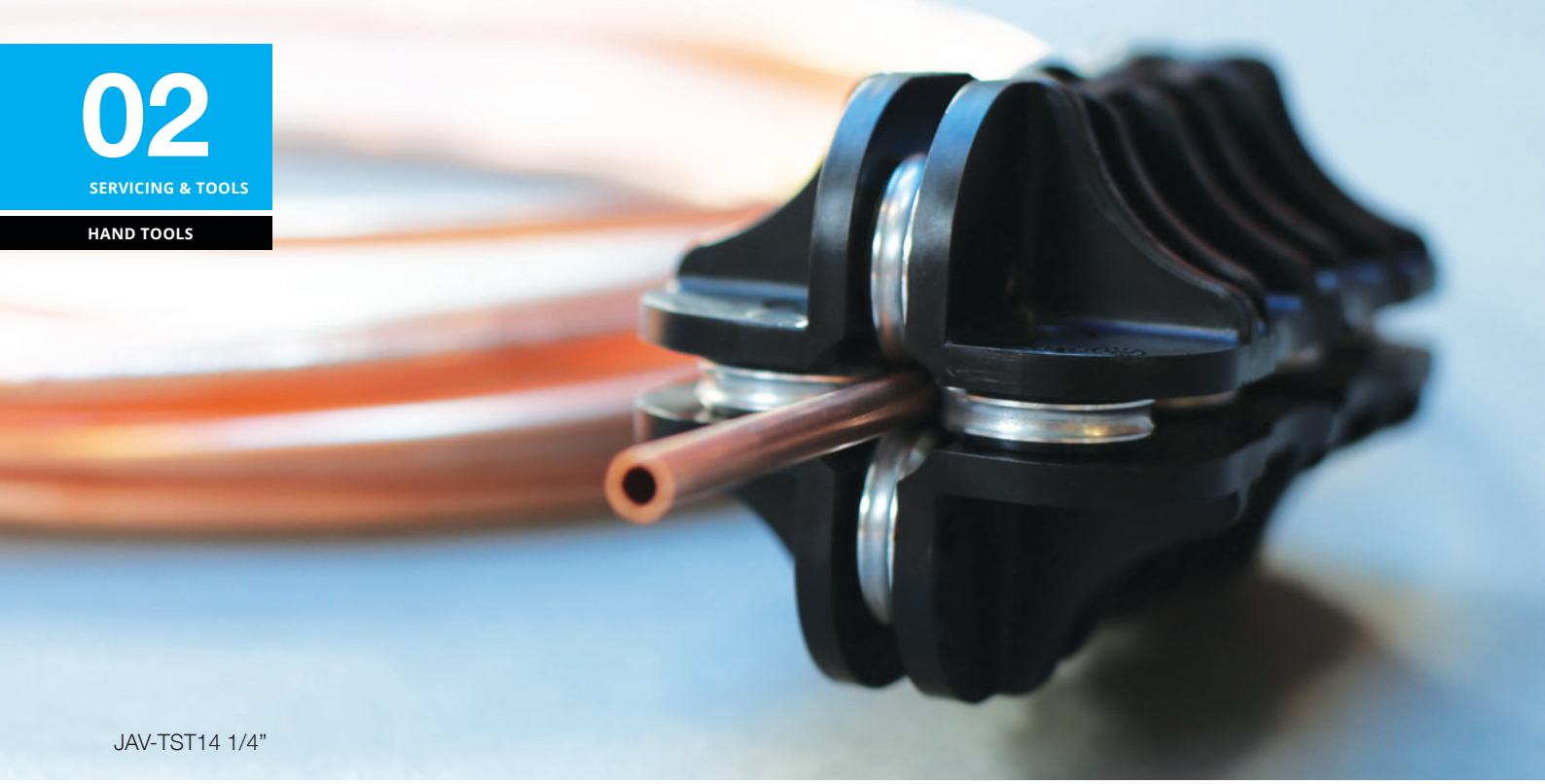

JAV-TST14 1/4”

# Tube Straightener

JAVAC EDGE 1

- Accurately straightens light wall tube from coil
- Straighten what you need – less material wastage
- Accelerated flow for better efficiencies from straighter pipe
- Rollers spiral along the tube to straighten and strengthen the tube
- Create radius tube bends using the central hole
- For use on soft drawn copper only

| Sizes OD | Part No. |
|---|---|
| 1/4” | JAV-TST14 |
| 3/8” | JAV-TST38 |
| 1/2” | JAV-TST12 |
| 5/8” | JAV-TST58 |
| 6mm | JAV-1035 |
| 10mm | JAV-1036 |

# Bending Kit

VECAMCO

- Facilitates bending of copper pipe
- Prevents the pipes from crushing during installation
- Avoids system failure due to pipe crushing
- Easy removal
- Reusable for multiple installations
- Reusable closure straps.

| Part No. | Ø COPPER TUBE |
|---|---|
| 9899-851-00 | 1/4” + 3/8”, 6.35 + 9.52 mm |
| 9899-852-00 | 1/2” + 5/8”, 12.7 + 15.87 mm |
| 9899-850-00 | 1/4” + 3/8” + 1,2” + 5/8”<br>6.35 + 9.52 + 12.7 + 15.87 mm |

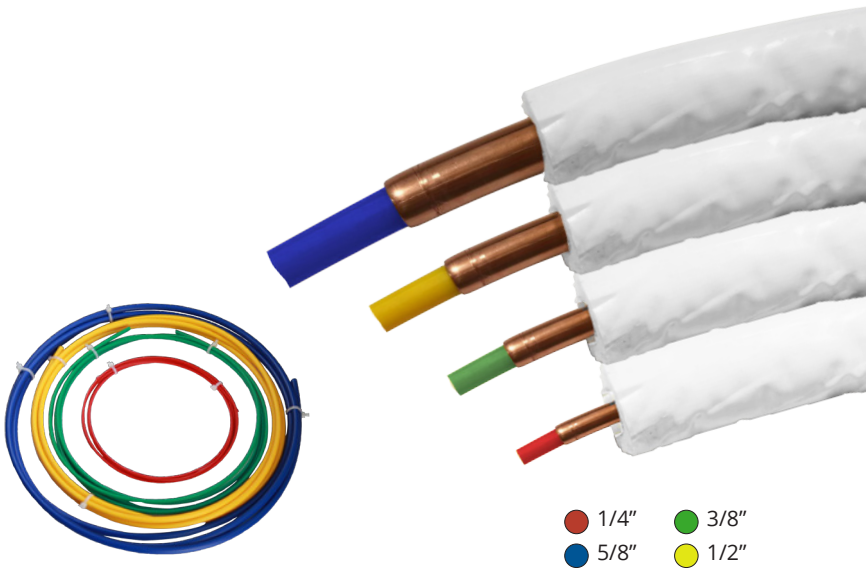


Information correct at time of going to press. Not all products are available in all regions.




# Digital Torque Wrench

JAVAC EDGE 1 PATENTED DESIGN.

- Adjustable head
- Digital torque value readout
- +/- 2% accuracy
- CW and CCW operation
- Peak hold and track mode selectable
- Buzzer and LED indicator for the 9 pre-settable target torques
- Water contact indicator
- Engineering units (N-m, ft-lb, in-lb, kg-cm) selectable
- 50 or 250 data memory for recall and joint torque auditing
- Auto Sleep after about 5 minutes idle
- Compatible with rechargable batteries
- Hard plastic carry case

| Part No. | Square Drive | Max. Torque |
|---|---|---|
| JAV-1356 | 3/8” | 85 N-m / 62.7 ft-lb / 752 in-lb / 867kg-cm |

| Accuracy | | Torque Measuring Range (N-m) | Length |
|---|---|---|---|
| B | +/-2%-CW / +/-3%-CCW | 4.2~85 | 270mm |

| Accuracy | BN | BR |
|---|---|---|
| | CW : ±2%<br>CCW : ±3% | |
| Data memory size | 50 | 250 |
| PC Connectivity | No | No |
| Pre-Setting No. | 9 sets | |
| Bright LED | 6 LEDs<br>(1 Red + 5 Green) | |
| Operation Mode | Peak hold/Track | |
| Unit Selection | N-m, in-lb, ft-lb, kg-cm | |
| Head Type | Adjustable wrench head | |
| Gear Teeth | 52 | |
| Size of Head of End Fitting (WxH) | 9 x 12mm | |
| Axial Distance | 17.5mm | |
| Button | 5 | |
| Battery 3 | AAA x 2 | |
| Operating Temperature | -10°C ~ 60°C | |
| Storage Temperature | -20°C ~ 70°C | |
| Humidity | Up to 90% non-condensing | |
| Drop Test | 1m | |
| Vibration Test | 10G | |
| Environmental test | Pass | |
| Electromagnetic compatibility test | Pass | |

Information correct at time of going to press. Not all products are available in all regions.



JAV-1358

# Piercing Plier

JAVAC 1

Designed to immediately pierce into any charging tube on all HVAC/R systems, mostly used in domestic applications

- Once the tube is pierced simple charging or evacuation can be carried out with minimal fuss
- Once complete the tube can be pinched off with the JAVAC Pinch off plier (JAV-1357) and the system can then be sealed

| Description | Part No. |
|---|---|
| Piercing Plier | JAV-1358 |
| Spare Needles (x10) | JAV-1359 |

# Pinch Off Plier

JAVAC 1

The JAVAC Pinch Off Pliers are designed to pinch off copper tube up to 8mm thickness

- Locking jaw
- Pinches off and locks in place

| Description | Part No. |
|---|---|
| Pinch off plier | JAV-1357 |




Information correct at time of going to press. Not all products are available in all regions.










## SPL-350 | SPIRIT LEVEL WITH WORKLIGHT

- 350 Lumen LED spirit level worklight
- Light-up spirit level vial & red laser pointer
- Tough ABS & aluminium construction
- Glow-in-the-dark strip around the LED
- Strong rear & side magnets
- Strong holster with belt clip
- Smart Memory – remembers last mode used
- IPX4 water resistant
- High quality 3.7v 800mAh Li-ion battery
- Battery level & charging indicator
- Low battery warning flash, reminds to charge
- Fast 2A USB-C charging – 1.5 hr charge time
- 1m high quality USB-C charging cable included

| | |
|---|---|
| **BATTERY** | 3.7v 800mAh Li-ion |
| **WEIGHT** | 177g |
| **DIMENSIONS** | H 55 x W 90 x D 20mm |

UNILITE

**LUMEN** 350LM | **RUNTIME** 1-25H | **BEAM** 23M | **IP RATING** IPX4

Information correct at time of going to press. Not all products are available in all regions.









## MT5M2 | HEAVY DUTY TAPE MEASURE

- Heavy duty 5m tape measure with 27mm wide blade
- Ultra high performance nylon coated SUPERBLADE - 5 x extended life
- 2.9m/9.5ft high stand-out blade
- SUPERBLADE withstands durability tests of falling sand particles with 60 litres of salt spray for 100 hours
- Magnetic triple riveted stainless steel dual hook with 1kg suction
- Dual colour double sided imperial & metric blade
- Durable rear pocket clip - wont detach even if screw loosens
- Powerful push lock secures the blade
- Superior internal mechanism provides smooth operation
- Impact resistant TPR covered ABS casing
- Drop tested from 9m

UNILITE

**WEIGHT** 322g | **DIMENSIONS** H 76.5 x W 79 x D 51.8mm

Information correct at time of going to press. Not all products are available in all regions.













## UK1 | FOLDING UTILITY KNIFE

- Heavy duty nickel body with ABS and a TPR grip
- 4 x SK5 black steel blades included
- 1 blade installed and 3 replacement blades conveniently stored inside
- Multi-position folding design
- Easy press unlocking button
- Quick release blade change
- Convenient wire/strap cutter slot
- Useful hole for attaching a lanyard
- Accepts most standard utility blades
- Extended size H 175 x W 33 x D 23.5mm

UNILITE

**WEIGHT** 125g | **DIMENSIONS** H 116 x W 41.5 x D 23.5mm













## EK4 | HEAVY DUTY FOLDING UTILITY KNIFE

- Heavy duty folding utility knife
- High-carbon 3Cr13 stainless steel blade
- ‘Drop point’ blade with serrated edge and tapered spine swedge
- Blade spine includes thumb rise for extra grip and 2 wire stripper notches
- Assisted one-handed opening with thumb studs
- Blade hardness 52-55 HRC
- Ultra tough ergonomic aluminium handle with front Quillion finger guard
- Easy to operate one-handed ‘Framelock’ mechanism
- Pocket clip for easy carrying

**WEIGHT** 135g | **DIMENSIONS** Length: 195mm













## FK3 | HEAVY DUTY FOLDING UTILITY KNIFE

- Heavy duty folding utility knife
- High-carbon 3Cr13 stainless steel blade
- 'Clip point' blade with serrated edge and tapered spine swedge
- Blade spine includes thumb rise for extra grip
- Blade hardness 52-54 HRC
- Assisted one-handed opening with thumb studs
- Easy to operate one-handed 'Liner lock' mechanism
- Ultra tough ergonomic aluminium handle with front Quillion finger guard
- Pocket clip for easy carrying
- Hole in the handle for adding a lanyard

UNILITE

**WEIGHT** 119.5g | **DIMENSIONS** Length: 198mm





Quick-release control


Trolley system



# Portable Lifter 3.7m

JAVAC EDGE 1 5

The ultimate solution designed to assist with the lifting and positioning of heavy equipment in the HVAC industry.

- The lifter is suitable for use with condensers, evaporators, ductwork, air handling units, pipework plus many other uses
- Featuring its extendable legs, wide platform base and robust design the lifter offers unparalleled suitability and adaptability for almost all HVAC lifting and positioning requirements
- Designed to endure tough conditions allowing you to work safely, securely and efficiently

| Description | Part No. |
|---|---|
| Portable Lifter 3.7m | JAV-1353 |

*Kit includes: 1 x Platform, 1 x Telescoping mast, 1 x Pulley with pulley cover, 1 x Steel cable, 1 x Motor and gearbox, 1 x Sliding ring, 4 x Legs, 2 x Wheel, 1 x Lever to select going up or down, 1 x Emergency Stop push button, 1 x Trigger button to control speed, 1 x Wheeled bag*

| | |
|---|---|
| Operational Voltage | 220V ~ 240V @ 50/60Hz |
| Operation Current | 4 Amp |
| Motor Duty | S3 30% |
| Plug Type | EU plug and UK plug adaptor |
| Max. Load Capacity | 130kgs (3.0m height) |
| Basic Height | 1m |
| Lifting Height | 3.69m |
| Standard Platform | 75 x 44cm |
| Operating Size | 115 x 118cm |
| Length of controlling cable | 4m |
| Length of power cord | 2.7m |
| Ambient temperature | -5 °C to 45 °C |
| IP Level | IP43 |
| Packaging box size | 102 x 28 x 33cm |
| Weight | 33.8 kgs |
| Accessories | Manual Handle |
| Safety Standard | EN 60204-1:2018 / EN ISO 12100:2010 |
| Compliance | WEEE / CE / UKCA |

Information correct at time of going to press. Not all products are available in all regions.



# Portable Lifter 5m

JAVAC EDGE 1 5

Engineered to minimise manual handling risks and enable safe raising and lowering of condensers, evaporators, duct work, air handling units and more. Built with a rugged construction to endure tough site conditions, complete with an innovative base featuring a small set of wheels to allow for easier transportation. The addition of a quick release cable brings easier operation and storage, with an optional remote control unit available to give even more practical possibilities.

- Load Capacity - 140kg @ 3m, 130kg @ 4m and 90kg above 4m.
- Folding Aluminium Platform - strong but low weight and hard wearing.
- Quick Release 5m Cable - makes storage and set up quicker and easier. No messy cables to store.
- Comes complete in a robust carry bag to protect and store safely.
- Robust aluminium telescoping mast and four folding support legs ensure safe and secure operation. Each leg is versatile, and able to be adjusted individually, so prefect for uneven ground.
- Built-in spirit level to ensure correct set up before lifting.



JAV-1559
Remote Control

| Description | Part No. |
|---|---|
| Portable Lifter 5m | JAV-1352 |

| Optional Extra | Part No. |
|---|---|
| Remote Control | JAV-1559 |
| *Enables single person operation from a safe working distance on the ground, rooftops or windows.* | |

| | |
|---|---|
| Operational Voltage | 220 V |
| Max. Load Capacity | 140 kg/3m, 130kg/4m, 90kg/over 4m |
| Basic Height | 1.17 m |
| Lifting Height | 4.95 m |
| Operating Size | 148 x 140 cm |
| Weight | 36 kg |

Information correct at time of going to press. Not all products are available in all regions.

# 03

# RECOVERY, VACUUM & CHARGING


| | |
|---|---|
| Recovery Units | 58-61 |
| Vacuum Pumps | 62-64 |
| Ultimate Hi-Flow | 65-71 |
| Hose | 72-76 |
| Kits | 77 |
| Manifolds | 78-79 |
| Gauges & Oils | 80-81 |
| Thermometers | 82 |
| Scales | 83-84 |
| Nitrogen | 85-87 |
| Accessories | 88 |


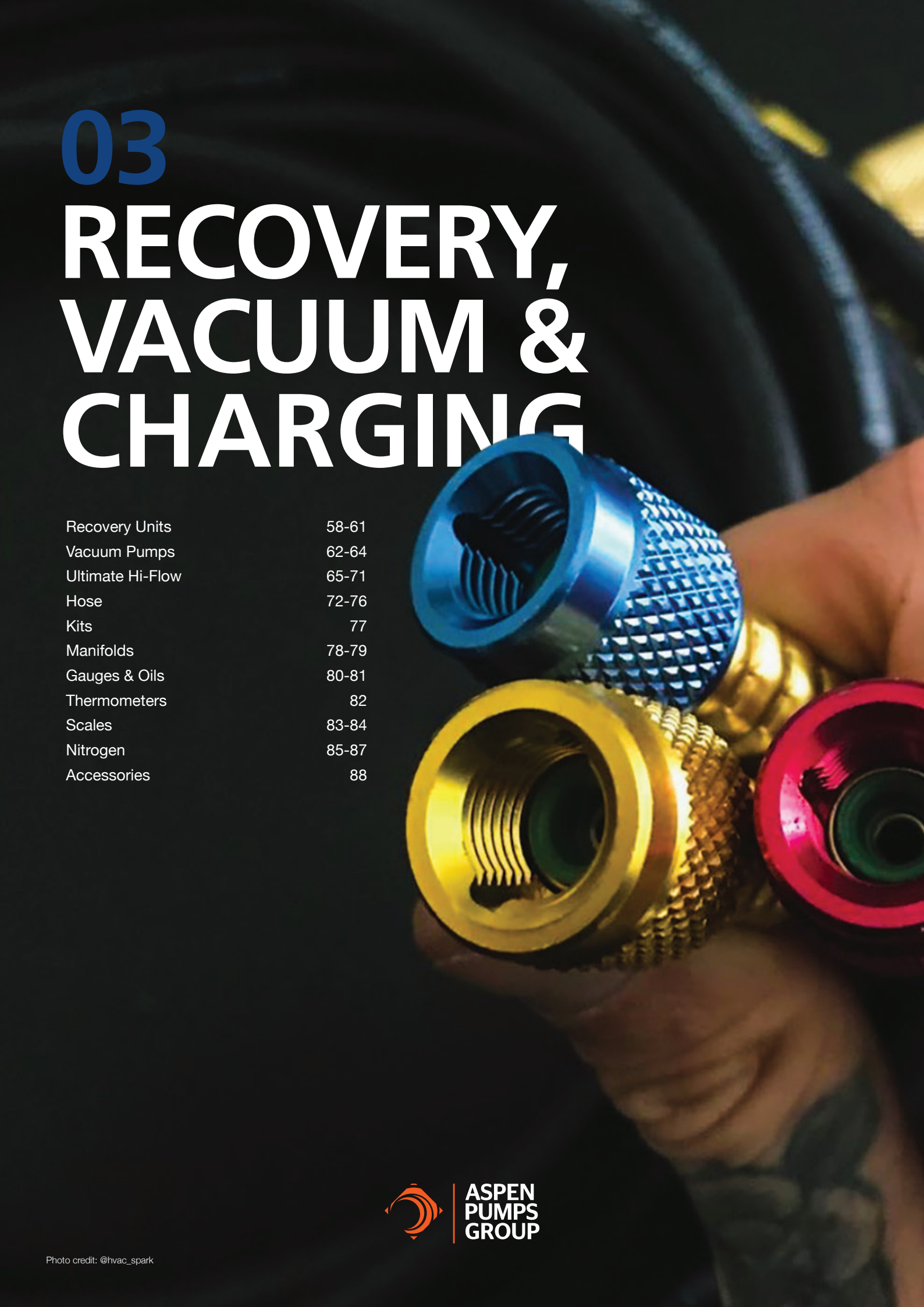

ASPEN PUMPS GROUP

Photo credit: @hvac_spark




# Velo-X Twin Cylinder Recovery Unit

JAVAC EDGE 1 A3 A2L 5 115/230V

The JAVAC Edge Velo-X. Our first recovery unit fully compatible with all A2L and A3 refrigerants. Industry leading recovery rates and JAVAC reliability giving our quickest and most efficient solution yet.

- R32 / R1234YF / HFC / HCFC / CFC / HFO / A2L / A3
- Lightweight complete with shoulder strap
- LED indicator showing recovery and machine status
- 5m hard wired cable and spark proof switch
- Dual gauge monitoring shows the tank and system pressures with integrated low pressure auto-off switch.
- Intelligent safety sensing
- Includes reusable mesh particulate filter for the suction port which can be easily cleaned or replaced

| Recovery Rates (R410a) | |
|---|---|
| Liquid | 377kg per hour |
| Vapour | 20kg per hour |
| Push / Pull | 408kg per hour |

| Description | Part No. |
|---|---|
| Velo-X Twin Cylinder Recovery Unit | JAV-1424 |

| | |
|---|---|
| Power supply | Universal Voltage 100-240VAC 50/60Hz |
| Motor size | 1.25 HP |
| Motor Type | Variable Speed Brushless DC, 1500-3000 rpm |
| Maximum current | 12.0 amps |
| Compressor | 2 Cylinder Oil-less Reciprocating, Air Cooled |
| High Pressure Cutout (Manual reset) | 550 PSIG |
| Operating Temperature Range | 0 to 49 °C |
| Dimensions | 370 × 245 × 325 mm |
| Weight | 13,8 kg |

Information correct at time of going to press. Not all products are available in all regions.




# XTR-Ultra A2L

**REFRIGERANT RECOVERY UNIT**

- Ultra lightweight – 8.4kg
- Ultra fast liquid recovery rate – 120kg/hr
- Spark proof design: 5 m hard wired cable
- Suitability A2L, HFC, HCFC & CFC

| Description | Part No. |
|---|---|
| XTR-Ultra A2L Recovery Unit UK | XTR-ULTRA-A2L |

| | |
|---|---|
| Suitability | A2L / HFC / HCFC / CFC |
| Push/Pull (kg/hr) | 420 |
| Vapour (kg/hr) | 19 |
| Liquid (kg/hr) | 120 |
| Power supply | 240 V |
| Motor size | 3/4 HP |
| HP cut out | 550 psi (38 bar) |
| Compressor | Oil less |
| Weight | 8.4kg |
| Dimensions | 320 x 220 x 260mm |

Information correct at time of going to press. Not all products are available in all regions.

A2L

A3




# HC-3 Hydrocarbon

JAVAC 1 A3 A2L

- Liquid and vapour recovery with automatic changeover
- Self discharging and Hot Gas/Cool Gas discharge switch
- On board refrigerant storage facility – capacity 250g
- Automatic high and low pressure safety switches and manual low pressure override switch
- 110V and 240V models available
- Compressor protection, HP switch plus thermal overload

| Description | Part No. |
|---|---|
| HC-3 Hydrocarbon | JAV-1032 |

| | |
|---|---|
| Suitability | R22, R134A, R404A, R407C,R410A, R413A, R417A, R502, R600A, R290, R1234YF, R32 & all CARE® blend refrigerants |
| Recovery (kg/hr) | 32 |
| Power supply | 240 V |
| Motor size | 145W |
| HP cut out | 360 psi (25 bar) |
| Compressor | Hermetic oil-lubricated, air cooled |
| Weight | 21kg |
| Dimensions | 470 x 235 x 335mm |

For use on A3 please scan the QR code to read the A3 safety instructions. **DO NOT USE UNLESS FULLY QUALIFIED FOR A3.**

Information correct at time of going to press. Not all products are available in all regions.




# HC-Air Fan Ventilation Module

JAVAC 1 ATEX A3 A2L

- The HC-Air fan module is an essential service accessory to be used when transferring hydrocarbon refrigerant and should feature in the risk assessment process
- Commutated motor
- 5 m hard wired mains lead with moulded plug
- Non sparking thermoplastic fan blade for increased performance and reduced noise level
- Mains cable storage
- Robust painted steel casework

| Description | Part No. |
|---|---|
| HC-Air Fan Ventilation Module | JAV-1033 |

| | |
|---|---|
| Airflow | 700 m³ /h |
| Power supply | 230 V 50Hz |
| Power Absorbed | 25W |
| Fuse Protection | 3A |
| Ambient temperature rating | -20°C to 55°C |
| Weight | 6.48kg |
| Dimensions | 300 x 220 x 380mm |

For use on A3 please scan the QR code to read the A3 safety instructions. **DO NOT USE UNLESS FULLY QUALIFIED FOR A3.**

Information correct at time of going to press. Not all products are available in all regions.





Anti-oil demister to prevent oil-mist


Intake fittings

# Bulldog A2L/A3

**SPARK PROOF VACUUM PUMP**

JAVAC EDGE 1 A3 A2L 5 115/230V

- Spark proof design: 5 m hard wired 240 V cable
- Two stage oil sealed vacuum pump
- Isolation solenoid valve
- Dual oil mist filters to prevent oil mist
- Unique tri-connector offers three hose fittings designed to cover a broad range of application capabilities

| Description | Part No. |
|---|---|
| Bulldog A2L | VBD1622 |

| | |
|---|---|
| Suitability | All standard and A2L/A3 applications |
| Stage | Double |
| Ultimate vacuum | 15 Microns |
| Free air displacement | 156 l/m (5.5 CFM) |
| Power supply | 240 V 50Hz |
| Motor size | 2880 rpm |
| Power cord | 5 m, Glanded |
| Oil capacity | 450ml |
| Intake fittings | 1/4", 5/16", 3/8" SAE |
| Weight | 12.5kg |
| Dimensions | 338 x 212 x 238mm |

For use on A3 please scan the QR code to read the A3 safety instructions. **DO NOT USE UNLESS FULLY QUALIFIED FOR A3.**

Information correct at time of going to press. Not all products are available in all regions.




# CC Series A2L/A3

**SPARK PROOF VACUUM PUMPS**

JAVAC A3 A2L 5 115/230V



- High performance A2L / A3 range
- Sparkproof switches
- Hard wired 5m Lead
- Dual Voltage
- Solenoid valve
- Easy Access oil drain

| Part No. | CC-31 A2L | CC-141 A2L | CC-231 A2L |
|---|---|---|---|
| Suitability | All standard and A2 / A3 applications | | |
| Stage | Double | | |
| Ultimate vacuum | 15 microns | | |
| Free air displacement | 40 l/m (1.4 CFM) | 151 l/m (5.3 CFM) | 251 l/m (8.9 CFM) |
| Power supply | Dual voltage 110/240 V 50Hz | | |
| Motor size | 1/4 HP | 1/2 HP | 2/3 HP |
| Power cord | IEC | | |
| Oil capacity | 140 ml | 540 ml | 620 ml |
| Intake fittings | 1/4" SAE, 3/8" SAE | | |
| Weight | 4.5 kg | 11 kg | 14.8 kg |
| Dimensions | 265 x 105 x 220 mm | 348 ×140 × 272 mm | 380 × 160 × 285 mm |

For use on A3 please scan the QR code to read the A3 safety instructions. **DO NOT USE UNLESS FULLY QUALIFIED FOR A3.**

Information correct at time of going to press. Not all products are available in all regions.

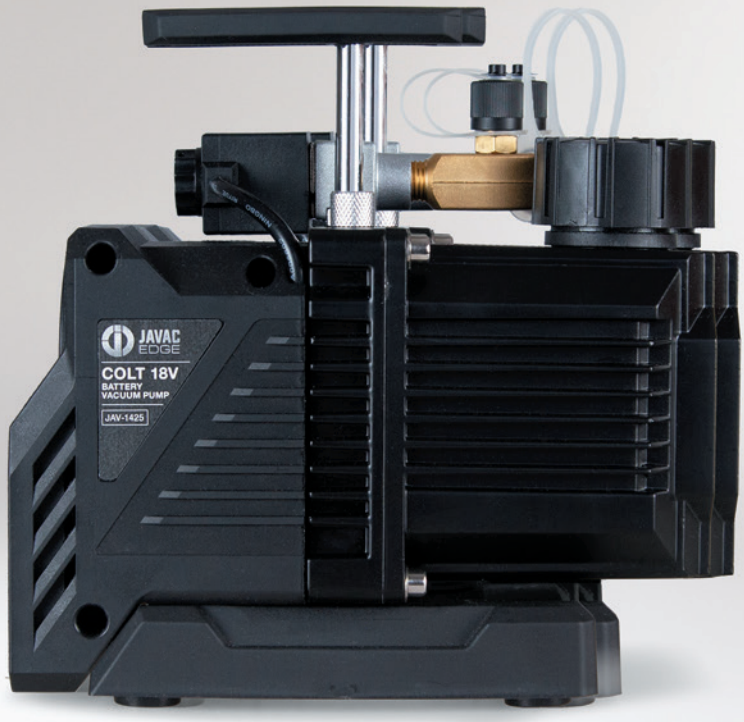


# Colt 18V A2L/A3

**SPARK PROOF BATTERY VACUUM PUMP**

- Anti-oil-returning design + Solenoid Valve
- Anti-oil demister to prevent oil spillage
- 2CFM, 18V Brushless DC Motor
- 55 l/min, Oil circulation design
- Pump Only, Battery not included
  (Battery Adaptors included for Milwaukee and Makita)

| Description | Part No. |
|---|---|
| Colt 18V Battery Vacuum Pump | JAV-1425 |

| | |
|---|---|
| Suitability | All standard A2L and A3 applications |
| Power supply | 18v, 5.0Ah Battery Powered |
| Ultimate vacuum | 30 microns (4 Pa) |
| Free air displacement | 55 l/m (2.0 CFM) |
| Motor size | 4000 rpm |
| Oil capacity | 140ml |
| Intake fittings | 1/4" and 3/8" |
| Weight | 3.1kg |
| Dimensions | 190 × 105 × 192 mm |

For use on A3 please scan the QR code to read the A3 safety instructions. **DO NOT USE UNLESS FULLY QUALIFIED FOR A3.**

Information correct at time of going to press. Not all products are available in all regions.




# INTRODUCING ULTIMATE HI-FLOW TOOL RANGE

The new Ultimate Hi-Flow tool range strengthens the Javac Edge brand with a cutting-edge line up of professional-grade tools engineered for speed, reliability and performance. Designed to streamline both set up and operation, the range dramatically improves efficiency during system evacuation and refrigerant recovery.

Precision-machined from aircraft-grade aluminium and finished with a durable anodised coating, these tools deliver exceptional strength while remaining lightweight and portable - built to perform on site, job after job.

Innovative designs enable fast core valve removal for completely unrestricted refrigerant flow, while high linear-flow fittings support multiple hose connections for maximum throughput. The result is faster evacuation, quicker recovery times, and reduced downtime on every job.

Every product in the range is deep vacuum rated to 20 microns with a maximum working pressure of *800 psi (55bar)*, providing engineers total confidence in the most demanding applications.




# Hi-Flow Core Removal Tool

The Ultimate Hi-Flow Core Removal Tool is a professional-grade, vacuum and pressure-rated valve core removal accessory designed for HVAC/R service, refrigerant recovery, and system evacuation. By removing restrictive valve cores, it provides true full-flow system access, significantly increasing both recovery and evacuation speed as well as the achievable depth of vacuum. It also allows connection to a vacuum gauge as close as possible to the unit being evacuated. This tool will improve service time on any system that relies on a Schrader valve for refrigerant access.

**Key Features & Benefits:**

**Full-flow valve core removal** – Eliminates core restriction for maximum flow, faster recovery/evacuation, and deeper vacuum.
**Deep-vacuum rated** – Maintains leak-free performance under vacuum conditions.
**High-pressure rated** – Safe for charging and use with high-pressure refrigerants (e.g. R410A).
**Magnetic base / secure handling** – Prevents lost valve cores during service.
**Core-retention removal mechanism** – Securely grips and extracts cores to avoid loss.
**Side-port connection** – Enables gauges or hoses for evacuation, charging, or testing.
**No tools required** - Hand tighten only.
**Two sizes in one tool** - 1/4” and 5/16”.
**Refrigerant Ready** - Compatible with A1, HFC/HFO, low GWP A2L and A3 refrigerants.

| Description | Part No. |
|---|---|
| Ultimate Hi-Flow Core Removal Tool | JAV-1600 |

| Specification | |
|---|---|
| Service Port | 1/4” female flare<br>(with 5/16” female for mini-split systems) |
| Core / Side Port | Both ports: 1/4” male flare with removable valve core |
| Vacuum Rating | 20 microns. Ideal for system evacuation |
| Maximum Working Pressure | 800 psi (approx. 55bar) matching higher pressure refrigerant system requirements (R410a) |
| Materials & Seals | Select materials compatible with common (e.g. HFC, HFO, A2L, A3) - HNBR O-rings / sealing elements (Super Seals) as well as proprietary PTFE long life ball valve seals |
| Core-Grip Mechanism | Adjustable tip to securely grab a range of valve core sizes for removal/re-installation |
| Side Port Functionality | Allows connection of vacuum pump, vacuum gauge or changing hose |
| Compatibility | Refrigerants including HFC, HFO, A2L & A3, recovery and evacuation |

Information correct at time of going to press. Not all products are available in all regions.

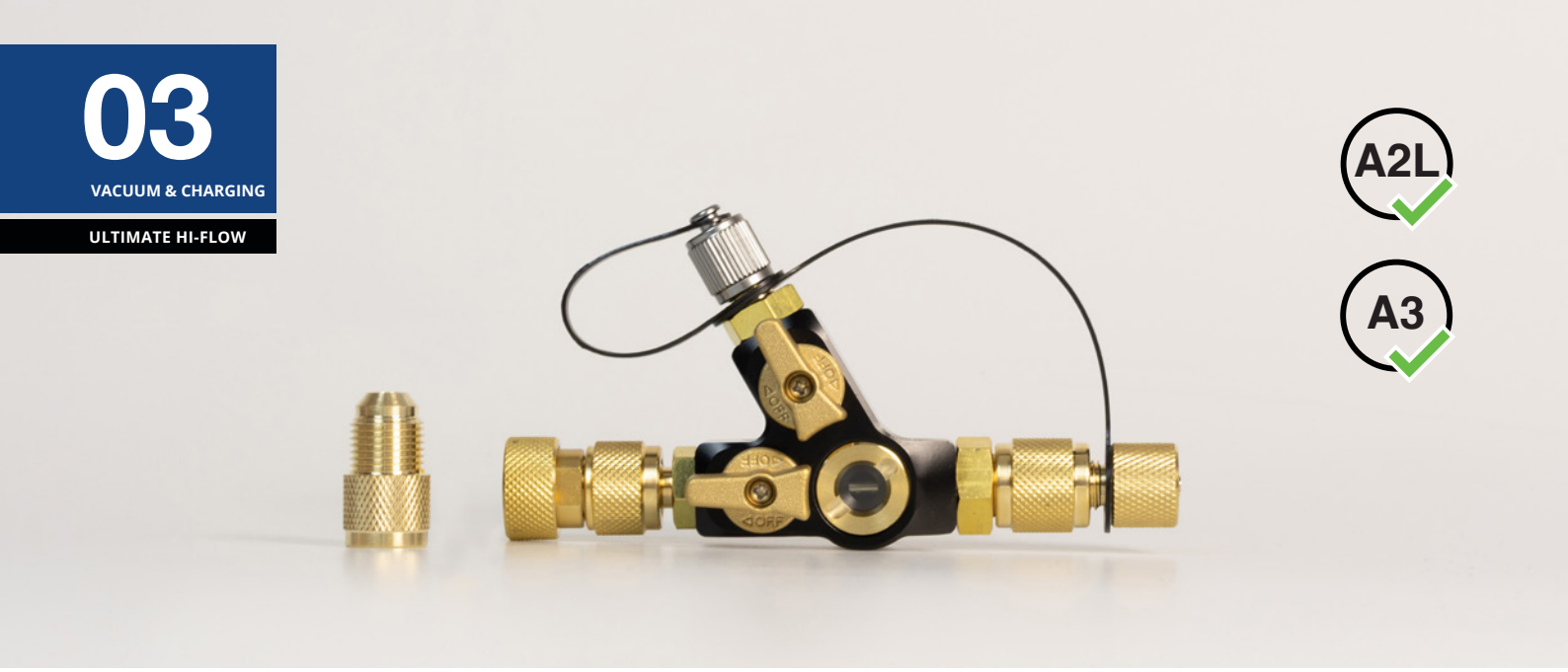

# Hi-Flow Core Removal Y Tool

## Dual Valve with Sight Glass

The Ultimate Hi-Flow Core Removal Y Tool with Sight Glass and Dual Valve is a professional-grade, vacuum and pressure-rated valve-core removal accessory engineered for HVAC/R service, recovery, evacuation and charging tasks. It offers dual-valve functionality, high speed Y flow path for increased flow and a sight glass to witness core removal and installation as well as the safe control of refrigerant during system recovery and charging. Designed to speed up refrigerant recovery, evacuation, charging, reduce tool count, and improve workflow efficiency for technicians working on a wide range of systems.

**Key Features & Benefits:**

**Dual-Valve with Side Port Isolation** – Built-in ball valve isolates gauges or hoses for safer, more flexible servicing.
**Y-Configuration** – Creates linear flow for faster evacuation, recovery, and charging.
**Sight Glass** – Monitor core removal and refrigerant flow during service.
**Full-Flow Core Removal** – Eliminates restrictive valve core for maximum flow.
**Deep Vacuum Rated** – Leak-free performance under vacuum conditions. (20 microns)
**Swappable Fittings** – 1/4” standard and 5/16” for mini-splits for broad compatibility.
**Core-retention removal mechanism** – Securely grips and extracts cores safely.
**Refrigerant-Ready** – Compatible with A1, HFC/HFO, low-GWP A2L/A3 refrigerants.
**Two Active Lines** - Speed up system evacuation and refrigerant reclaim
**Optimised Flow Paths** - Large bore internal passages engineered for higher linear flow.

| Description | Part No. |
|---|---|
| Ultimate Hi-Flow Core Removal Tool Y Tool Dual Valve | JAV-1601 |

| Specification | |
|---|---|
| Service Port | 1/4” female flare (5/16” female fitting for mini-split fitting applications) |
| Side Port/Core Removal Port | Both ports: 1/4” male flare with ball valve isolation |
| Vacuum Rating | 20 microns. Ideal for system evacuation |
| Maximum Safe Working Pressure | 800 psi (approx. 55bar) matching higher pressure refrigerant system requirements (R410a) |
| Material & Seals | Select materials compatible with common refrigerants (e.g. HFC, HFO, A2L, A3) - HNBR O-rings / sealing elements (Super Seals) as well as proprietary PTFE long life ball valve seals. |
| Handling/User Interface | Large rod/spinner for core removal; secure core retention; easy swap fitting design for 1/4” & 5/16” |
| In the box | Tool with additional 1/4” & 5/16” adaptor and standard 1/4” & 5/16” tethered fitting |
| Compatibility | Refrigerants including HFC, HFO, A2L & A3, recovery and evacuation |

Information correct at time of going to press. Not all products are available in all regions.




# Hi-Flow Y Fitting Series

JAVAC EDGE 1 A3 A2L

The Ultimate Hi-Flow Y Fitting Series are high preformance vacuum rated Y adaptors built for HVAC/R evacuation, recovery and charging operations. Each one is designed to provide unrestricted high flow paths and flexible hose connections. Each of the three size combinations available enable engineers to connect multiple hoses to a single point - ideal for complex systems, multi port manifolds or multi hose recovery set ups.

| Specification | |
|---|---|
| Body Material | Aircraft grade aluminium - for strength, light weight and corrosion resistance, with solid brass connectors and flare faces |
| Connection Types | Two 3/8” male flare branches. Female flare swivel - branch size varies by model (3/8”, 1/4” or 1/2”) |
| Internal Bore/ Flow Path | Large internal diameter branches engineered for high linear flow |
| Vacuum Rating | 20 microns suitable for deep system evacuation. |
| Maximum Safe Working Pressure | 800 psi (approx. 55bar) matching higher pressure |
| Material & Seals | High-quality solid brass flare sealing elements suitable for refrigerants (HFC, HFO, A2L, A3) and HNBR Super Seals. |
| Finish/Coating | Durable anodized finish to resist oxidation/ corrosion - Ideal for field use in varied environments |

| Description | Part No. |
|---|---|
| Ultimate Hi-Flow Y Fitting Series | JAV-1602/1603/1604 |

| Part Number | Connection Size | Usage |
|---|---|---|
| **JAV-1602** | 3/8” x 3/8” x 3/8” | Hi-flow Y for systems where all connections are 3/8” |
| **JAV-1603** | 3/8” x 3/8” x 1/4” | For set ups calling for 1/4” connection on vacuum pumps or reclaim units |
| **JAV-1604** | 3/8” x 3/8” x 1/2” | For setups calling for a 1/2” connection for larger vacuum pump connections |

**Key Features & Benefits**

**Unrestricted Flow** – High linear flow design for maximum throughput, significantly speeding up evacuation and recovery.
**Deep Vacuum Rated (20 microns)** – Leak-free performance, crucial for reliable evacuation.
**High-Pressure Compatible** – Engineered for use with high pressure refrigerants (R410a).
**Multi-Hose Connection** – Safe multi hose connection simplifying hose managment.
**Durable Build** – Aluminium body, brass flare faces, and HBNR seals for long-term reliability.
**Compact Design** – Y-shaped form fits easily into tight spaces.

Information correct at time of going to press. Not all products are available in all regions.




A2L

A3

# Hi-Flow Bi-Valve Y Branch

JAVAC EDGE 1 A3 A2L

The Ultimate Hi-Flow Bi-Valve Y Branch is a heavy-duty, vacuum and pressure-rated Y adapter fitting for HVAC/R applications. Designed to provide maximum flow capacity and flexible hose routing while also offering valve isolation for improved control and convenience. The bi valve configuration enables independent control of each of the two male flare branches, giving technicians greater flexibility when evacuating, charging, or servicing refrigerant systems.

**Key Features & Benefits**

**Dual-Valve Design** – Independent valves on each male flare branch for easy isolation and flow control.
**Full-Flow Passage** – Maximised bore size for faster evacuation, recovery, and charging.
**Vacuum & Pressure Ready** – Handles deep vacuum and high-pressure refrigerants reliably.
**Flexible Hose Setup** – Connect multiple hoses to one port for complex systems.
**Durable Build** – Aircraft-grade aluminium and brass for long life and corrosion resistance.
**Compact Design** – Y-branch form reduces bulk compared to traditional manifolds.

| Description | Part No. |
|---|---|
| Ultimate Hi-Flow Bi-Valve Y Branch | JAV-1605 |

| Specification | |
|---|---|
| Body Material | Aircraft grade aluminium - for strength, light weight and corrosion resistant, with solid brass connectors and flare faces |
| Connection Types | Two 3/8” male flare connections and one 3/8” female flare connection. |
| Internal Bore/ Flow Path | Enlarged and optimised internal flow paths giving high linear flow |
| Vacuum Rating | Deep vacuum (20 microns) |
| Maximum Safe Working Pressure | 800 psi (approx. 55bar) matching higher pressure refrigerant system requirements |
| Valve type | Ball valves with long life proprietary PTFE seals |
| Material & Seals | High-quality flare connections and HNBR (Super seals) compatible with standard refrigerants (A1, HFC/HFO, A2L & A3) |

## Hi-Flow Tool Spares Kit



| Description | Part No. |
|---|---|
| Ultimate Hi-Flow Tool Spares Kit | JAV-1610 |

Kit contains: HNBR O rings to suit the full range. One to service the 1/2” port, and two each to suit 3/8”, 5/16” and 1/4” applications. Spare Caps to suit 5/16” and 1/4” ports (one of each size)

Information correct at time of going to press. Not all products are available in all regions.




JAV-1609 JAV-1608

# Hi-Flow Access T Fitting

The Ultimate Hi-Flow Access T Fittings are vacuum and pressure rated T adaptor designed for HVAC/R service, charging, evacuation or diagnostic work. Available in two sized they provide a compact and low loss access point for gauges, vacuum pumps or reclaim units. With their light and compact design they are ideal to tap into a system without the need for bulky manifolds or unnecessary extra hoses.

| Part Number | Connection Size | Typical Usage |
|---|---|---|
| **JAV-1608** | 1/4” female flare<br>1/4” male flare<br>1/4” male flare side port | Standard service fittings and systems using 1/4” flare connections |
| **JAV-1609** | 5/16” female flare<br>5/16” male flare<br>5/16” male flare side port | For systems using larger 5/16” service fittings - especially in mini-split applications |

**Key Features & Benefits**

**Low-Loss Charging T** – Enables charging, evacuation, or diagnostics with minimal refrigerant loss—no bulky manifold needed.
**Side Port** – Quick connection for gauges, pumps, or hoses without disconnecting the main service port.
**Vacuum & Pressure Rated** – Safe for deep vacuum and high-pressure operations (up to 800psi / 55bar).
**Compact Design** – Ideal for use in tight spaces.
**Efficient Access** – Simplifies hose management and speeds up work in any environment.

| Description | Part No. |
|---|---|
| Ultimate Hi-Flow Access T Fitting | JAV-1608/1609 |

| Specification | |
|---|---|
| Body Material | Aircraft-grade aluminium for strength, light weight, and anodised for corrosion resistance |
| Both Male Ports | 1/4” or 5/16” male flare connection for gauges or service hose attachment |
| Maximum Safe Working Pressure | 800psi ( / 55bar) matching higher pressure refrigerant system requirements (R410a) |
| Material & Seals | High-quality flare connections and HNBR (Super seals) compatible with standard refrigerants (A1, HFC/HFO, and where applicable A2L & A3) |
| Vacuum Capability | Engineered for deep vacuum operations (20 microns rated) |
| Finish/ Coating | Durable finish or coating to resist wear, corrosion and optimise field lifespan |

Information correct at time of going to press. Not all products are available in all regions.




JAV-1606 JAV-1607

# Hi-Flow Core Depressor Tool

The Ultimate Hi-Flow Core Depressor Tools - precision engineered vacuum and pressure rated core depressor accessories for HVAC/R service. Available in two size combinations, they enable safe and controlled valve core depresssion on Schrader fittings. Ideal when charging, recovering or servicing refrigerant systems and minimising refrigerant loss, protecting equipment and removing the risk of user front burns.

| Specification | |
|---|---|
| Side-Port/ Hose/ Gauge Connection | JAV-1606 - 1/4” flare connections for Schrader valve and service hose attachment. JAV-1607 - 5/16” flare connections for Schrader valve and service hose attachment. |
| Vacuum Rating | Deep vacuum capable (20 microns) |
| Maximum Safe Working Pressure | High-pressure rated (up to 800 psi/55 bar) - safe for higher-pressure refrigerants (R410a) |
| Seals/ Internal Components | High-quality O-rings / back-seat seals compatible with modern refrigerants (HFC, HFO, A2L, A3) |
| Body Material | Aircraft-grade aluminium - for strength, corrosion resistance, and longevity |

| Description | Part No. |
|---|---|
| Ultimate Hi-Flow Core Depressor Tool | JAV-1606/1607 |

| Part Number | Connection Size | Typical Usage |
|---|---|---|
| **JAV-1606** | 1/4” female flare 1/4” male flare side port | Schrader valve for connection of gauges or service hoses |
| **JAV-1607** | 5/16” female flare 5/16” male flare side port | Schrader valve for connection of gauges or service hoses |

### Key Features & Benefits

**Accurate Core Control** – Smooth, precise core depression for negligible refrigerant loss while eliminating the risk of user frost burn.
**Vacuum & Pressure Rated** – Reliable under deep vacuum and high-pressure conditions. (20 microns)
**Low-Loss Side Port** – Connect gauges or hoses with negligible discharge for diagnostics and charging.
**Durable Build** – High-quality aluminium, brass, and HNBR seals for long-term reliability.
**Compact Design** – Ideal in tight spaces.

Information correct at time of going to press. Not all products are available in all regions.





Safety Swivel
One-touch design



*

# Safe Seal

## CHARGING HOSES

Patented Safe Seal technology: 'One-Touch' design allows you to screw the fitting on to the system before starting refrigerant flow, avoiding refrigerant loss and risk of 'refrigerant burn'. Then simply turn the knob to start/stop flow.

- 72" hose (183cm), Suitable for standard refrigerants.
- The safety swivel sleeve allows free rotational movement of the hose without the fitting coming loose being put under unnecessary strain and preventing unwanted leaks

| Description | Part No. |
|---|---|
| Charging Hoses, Safe Seal, 1/4", Working Pressure: 600/3000 PSI (41 bar) Bursting pressure of 3000 psi (207 bar) | JAV-1071 |
| R410A/R32 Charging Hoses, Safe Seal, 1/4" x 5/16", Working Pressure: 800/4000 PSI (55 bar). Bursting pressure of 4000 psi (276 bar) | JAV-1072 |

| Safe Seal Hose Gaskets | Part No. |
|---|---|
| Safe Seal Gasket Manifold End 1/4" (10 pack) | JAV-1275 |
| Safe Seal Gasket Serve End 5/16 x 1/4" (10 pack) | JAV-1276 |
| Safe Seal O-ring for 5/16" | JAV-1355 |
| Safe Seal O-ring for 1/4" | JAV-1354 |

*Photo credit @hvac_spark

Information correct at time of going to press. Not all products are available in all regions.




# Turbo Flow

## VACUUM AND CHARGING HOSES

JAVAC EDGE 1 A3 A2L

- Large bore vacuum and charging hose
- Designed specifically to increase speed, flow and efficiency when using vacuum pumps and refrigerant charging via the 3/8th access fittings
- Available in 60” (1525mm) and 72” (1828.8mm) lengths
- Connections: 3/8” x 3/8” and 3/8” x 1/4”
- Teflon sealed
- Used for all vacuum and refrigerant charging procedures

| Length | Part No. |
|---|---|
| 72” 3/8 Vacuum Hose | JAV-1362 |
| 60” 3/8 Vacuum Hose | JAV-1363 |
| 72” 3/8 x 1/4 Vacuum Hose | JAV-1364 |
| 60” 3/8 x 1/4 Vacuum Hose | JAV-1365 |

| | |
|---|---|
| **Max working pressure** | 55 Bar |
| **Burst Pressure** | 275 Bar |
| **Core depressor** | No |
| **Ball valve** | No |
| **Colour** | Black |

| **NEW! Gaskets** | **Part No.** |
|---|---|
| JAVAC Edge Teflon Gaskets 3/8” T Flow (10 pack) | JAV-1374 |

Information correct at time of going to press. Not all products are available in all regions.



JAV-1550
1/2” Increased bore size – faster and deeper vacuum

# 1/2” Turbo Flow

## VACUUM AND CHARGING HOSE

**Faster, Deeper Vacuum** – The oversized 1/2” bore hose increases flow rate, allowing for deeper and quicker vacuum drastically reducing system evacuation time.

**Universal Compatibility** – Works with any vacuum pump that has a 3/8” connection for seamless integration into your workflow.

**High-Pressure Ready** – Designed to handle all high-pressure refrigerants without collapsing or permeating under vacuum pressure.

**Optimized for All Refrigerants** – Ensures efficient system charging and evacuation across standard HVAC refrigerants.

| Description | Part No. |
|---|---|
| 1/2” 3/8 x 1/4 Vacuum Hose, 72” long | JAV-1550 |

| | |
|---|---|
| **Connections** | 1/4” and 3/8” SAE |
| **Max. Working Pressure** | 44 Bar / 650 PSI |
| **Min. Burst Pressure** | 222 Bar / 3200 PSI |
| **Material** | 4 Ply Hose; HNBR Neoprene Seals |
| **Vacuum Rated** | Up to 20 Microns |
| **Length** | 72” |

Information correct at time of going to press. Not all products are available in all regions.



JAV-1375

# Hose Sets

**NO BALL VALVE, STANDARD & SET BACK**

JAVAC 1

- Red/Yellow/Blue
- Temperature rating -30 to +95 oC



JAV-1381



JAV-1387

| Part No. | Length / Type / Connections | No Ball Valve | Ball Valve Set Back | Standard Ball Valve | Burst pressure rating / Max working pressure Bar |
|---|---|---|---|---|---|
| JAV-1375 | 72” hose set 1/4” x 1/4” | ✓ | – | – | |
| JAV-1376 | 60” hose set 1/4” x 1/4” | ✓ | – | – | 3000 PSI/206 / 600 PSI/41 |
| JAV-1377 | 36” hose set 1/4” x 1/4” | ✓ | – | – | |
| JAV-1378 | 72” hose set R410a 1/4” x 5/16” | ✓ | – | – | |
| JAV-1379 | 60” hose set R410a 1/4” x 5/16” | ✓ | – | – | 4000 PSI/275 / 800 PSI/55 |
| JAV-1380 | 36” hose set R410a 1/4” x 5/16” | ✓ | – | – | |
| JAV-1381 | 72” hose set 1/4” x 1/4” | – | ✓ | – | |
| JAV-1382 | 60” hose set 1/4” x 1/4” | – | ✓ | – | 3000 PSI/206 / 600 PSI/41 |
| JAV-1383 | 36” hose set 1/4” x 1/4” | – | ✓ | – | |
| JAV-1384 | 72” hose set R410a 1/4” x 5/16” | – | ✓ | – | |
| JAV-1385 | 60” hose set R410a 1/4” x 5/16” | – | ✓ | – | 4000 PSI/275 / 800 PSI/55 |
| JAV-1386 | 36” hose set R410a 1/4” x 5/16” | – | ✓ | | |
| JAV-1387 | 72” hose set 1/4” x 1/4” | – | – | ✓ | |
| JAV-1388 | 60” hose set 1/4” x 1/4” | – | – | ✓ | 3000 PSI/206 / 600 PSI/41 |
| JAV-1389 | 36” hose set 1/4” x 1/4” | – | – | ✓ | |
| JAV-1390 | 72” hose set R410a 1/4” x 5/16” | – | – | ✓ | |
| JAV-1391 | 60” hose set R410a 1/4” x 5/16” | – | – | ✓ | 4000 PSI/275 / 800 PSI/55 |
| JAV-1392 | 36” hose set R410a 1/4” x 5/16” | | – | ✓ | |
| JAV-1366 | Teflon gaskets for 1/4” & 5/16” Pack of 10 | | | | |

# Gasket Picker

JAVAC 1




| Description | Part No. |
|---|---|
| Gasket Picker | JAV-1367 |

Information correct at time of going to press. Not all products are available in all regions.



# Supahose

## STAINLESS STEEL REFRIGERANT HOSE

JAVAC EDGE 1 A3 A2L

- Flexible PTFE lining surrounded by a braided AISI 304 / EN 1.4301 grade stainless steel wire
- Maximum working pressure of 260 bar
- Temperature Range: up to +260 °C
- 1/4" SAE Connection

| Length | Part No. |
|---|---|
| 12" (30,5cm ) | 120404 |
| 15" (38cm) | 150404 |
| 18" (46cm) | 180404 |
| 24" (61cm) | 240404 |
| 30" (76cm) | 300404 |
| 36" (91,5cm) | 360404 |
| 48" (122cm) | 480404 |
| 60" (152,5cm) | 600404 |
| 78" (198cm) | 780404 |

Information correct at time of going to press. Not all products are available in all regions.




# TurboFlow Vacuum & Charging Kit

**VETO + JAVAC EDGE ALL IN ONE BAG**

This complete charging and evacuation kit, is designed to handle all high-pressure referigerants and not to collapse or permeate under vacuum pressure.

- Truly universal to work with any vacuum pump with a 3/8" connection
- All products are vacuum rated so no leaks can occur when in ultimate vacuum
- All products are restriction free for complete TurboFlow state
- Significantly reduce evacuation times compared to a set up with a manifold and ¼" hoses
- Can be used on all standard refrigerants to efficiently and quickly charge HVAC systems
- All items available available to buy seperately

| Description | Part No. |
|---|---|
| TurboFlow Vacuum and Charging Kit | JAV-1422 |

*Kit includes: 2 x JAV-1364 TurboFlow 3/8" FL to ¼" FL black vacuum and charging hoses; 2 x JAV-1600 Hi-Flow JAVAC EDGE core removal tools ¼" as standard with 5/16" adaptor; 1 x JAV-1415 JAVAC Edge Veloci-Tee 3/8" Vacuum and Charge Tee; 3/8"MF on the run; 1 x AX3685 Veto Pro Pac Hose Hauler bag*

| Hose Hauler Bag (AX3685) specifications | |
|---|---|
| Size (w/d/h) | 430x130x430 mm |
| Weight (empty) | 1.8kg |
| Storage/pockets | 6 x pockets;1 x removeable parts/gauges bag |
| Max. Payload | 7kg |
| Internal volume | 50.5L |



AX3685


JAV-1600


JAV-1415


JAV-1364

Information correct at time of going to press. Not all products are available in all regions.





Manifold kit


Safe Seal Hoses

# Manifolds

JAVAC EDGE 1 5

Brand new range of manifolds, available as two and four valve in standalone and kit configurations. R410a, R32, R600a and R290 variants are fully A3 compatible.

All manifolds:

- 1/4 turn control valves for fast operation and increased refrigerant flow
- Smart Spring valves to ensure perfect sealing
- Sight glass
- Forged aluminium body – durable and lightweight
- 80mm gauge heads with rubber protection surround
- Aluminium Valve Knobs for increased damage resistance
- JAVAC Edge Manifold hanging strap with strong magnet
- Available as manifold only or as a kit

Manifold Kit:

- Manifold
- JAVAC Edge 72" Safe Seal Hoses*
- Robust carry case with laser cut foam protection & manual

| Gas | Product | Valve | Part No. |
|---|---|---|---|
| Multi Gas, R134A, R22, R404A, R407C | Manifold Only | 2 | JAV-1219 |
| | Manifold Kit | 2 | JAV-1218 |

| Gas | Product | Valve | Part No. |
|---|---|---|---|
| A3, R410a, R32, R600a, R290 | Manifold Only | 2 | JAV-1217 |
| | Manifold Kit | 2 | JAV-1216 |

Information correct at time of going to press. Not all products are available in all regions.




# CO2 Service Manifold Kit

**VETO + JAVAC EDGE ALL IN ONE BAG**

Specifically designed for use on modern $CO_2$ (R744) refrigeration systems, where higher operating pressures demand equipment you can rely on.

- All packed in a Veto Pro Pac Hose Hauler bag
- Proven double O-ring piston control
- Large 80mm gauges fitted with rugged protection boots
- Supplied with 10 spare 1/4" flare washers (CD-109-04)
- Unique purge valve for improved safety - ensure no pressure is retained after use for safe storage and transportation
- 3 x double layer steel mesh hoses fitted with spring protection

| | |
|---|---|
| Maximum Pressure | 160 Bar (2320.604 PSI) |
| Dimensions | 430 x 100 x 460mm |
| Weight | 4.4kg |

| Description | Part No. |
|---|---|
| CO2 160 bar manifold and hoses in a Veto Hose Hauler bag | JAV-1558 |

Information correct at time of going to press. Not all products are available in all regions.




# Torr Gauge

JAVAC

- Stainless Steel construction
- Blow out plug for over pressure protection (available as a spare Part No. CR2-PLUG)

| Description | Part No. |
|---|---|
| Torr Gauge | CR2-40 |

| | |
|---|---|
| Accuracy | Class 2 |
| Units | Torr, mbar |
| Operating pressure range | 0 - 40 Torr / 50 mbar |
| Connector type | 1/4” Flare connection |
| Diameter | 100mm |

# Vacuum Pump Oil

JAVAC

- Designed for rotary vane vacuum pumps
- Maximises performance and increases depth of vacuum
- Contains additives to improve the anti wear performance, oxidisation resistance, corrosion protection, pour point (cold starting), air release and anti foaming tendencies
- Low lacquer & carbon forming tendency ensuring cleaner systems
- Excellent corrosion resistance
- Improved sealing and mechanical efficiency
- High film strength. Minimal oil carry-over



| Description | Part No. |
|---|---|
| Universal Oil 1 L | HV68/1 |
| Universal Oil 4 L | HV68/4 |

Information correct at time of going to press. Not all products are available in all regions.




VG-64




JAV-1041

# VG64

## DUAL PORT DIGITAL VACUUM GAUGE

Dual port, high resolution, fast response digital vacuum gauge now with convenient magnetic HVAC strap.

- Reads vacuum in seven international units
- Ultra fine resolution
- Auto shut-off
- Display updates every 1/2 second
- Convenient built-in hanger
- Easy to clean sensor (use isopropyl alcohol)
- Low battery indicator

| Description | Part No. |
|---|---|
| Digital Vacuum Gauge | VG-64 |

# Digital Vacuum Gauge

Patented vacuum gauge technology* enables the highest accuracy possible in a micron gauge.

- Small and mighty. Pocket size, measuring only 110mm tall
- Automatic oil sensor
- 'Calibration self-check' function tells the user when and if re-calibrationis necessary
- Instantaneous warm-up and response time
- 'Leak Rate Indicator' & 'Programmable Productivity' functions (Evacuation and Rise-Time Analysis) – saving you time by automating the work

| Description | Part No. |
|---|---|
| Digital Vacuum Gauge | JAV-1041 |

Information correct at time of going to press. Not all products are available in all regions.






# Digital Alarm Thermometer

JAVAC 1

- Max/min memory
- Stainless Steel probe 5” with 1 metre cable
- Hold and alarm functions
- Hand size, with detachable probe
- Batteries included

| Description | Part No. |
|---|---|
| Digital alarm thermometer | RT-905 |

| | |
|---|---|
| Units | °C, °F |
| Temperature range | -50 ~ 200°C / -58 ~ 392°F |
| Power | 1 X AAA (included) |
| Probe size | 230 mm |
| Dimensions | 118 mm |

Information correct at time of going to press. Not all products are available in all regions.




# Hydrocarbon Scale

**(INC. TWO HOSES AND BALL VALVE)**

JAVAC EDGE 1 A3 A2L

- Large weighing platform and durable and sturdy injected molded components
- Back-lit LCD display
- High accuracy load cell
- Pass-through charging (moving the charge hose does not affect weight)
- Small diameter durable CLRF Series hoses included
- Charging valve included for precision charging
- Schrader valves included to prevent refrigerant loss/leaks
- Cylinder adapter with Secure Seal low-loss fitting included for inverted charging
- 2 charging orientation options: upright and inverted
- Velcro loop included for stabilizing the refrigerant canister (upright charging)
- Designed for R600a and R290
- Other charging methods are possible by using additional adapters for different canister types

| Description | Part No. |
|---|---|
| Hydrocarbon scale | DS-5000 |

| | |
|---|---|
| Capacity (g/oz) | 5000g/176oz |
| Accurac (g/oz) | 1g / 0.1oz |
| Power Supply | 2 x AA batteries (included) |
| Dimensions l x w x h | 200 x 150 x 48mm (7.9 x 5.9 x 1.9”) |

# Hydrocarbon Can Valve

JAVAC 1

- Can valve connection 1/4” SAE outlet
- Suitability R600 and R290 cans



| Description | Part No. |
|---|---|
| Hydrocarbon Can Valve | JAV-1393 |

Information correct at time of going to press. Not all products are available in all regions.






# Procharge 100

## REFRIGERANT CHARGING SCALE

The Procharge 100 digital refrigerant charging scale is a welcome addition to JAVAC's range of refrigerant service tools. An upgrade on the current best selling Procharge unit.

- Ideal for air conditioning and refrigeration
- This unit is highly accurate with 5 gram resolution and an increased weighing capacity of 100kg. The compact platform is 223mm x 223mm, easily removed from the carry case for use, also featuring an easy to read LCD display
- This unit also includes a memory function, holding the last reading until cleared. Even when the unit automatically shuts down after
  10 minutes of non use, the last reading is still stored in memory

| | |
|---|---|
| Type | Digital |
| Weighing capacity | 100kg |
| Accuracy | +/- 0.5% |
| Resolution | 5 g |
| Power | 9 V battery |
| Battery life | 30 hours |
| Operating temperature | 10 to 40ºC |
| Weight | 2.5kg |
| Dimensions | 250 x 250mm |

| Description | Part No. |
|---|---|
| Procharge 100 | G58610 |

Information correct at time of going to press. Not all products are available in all regions.



# Nitrogen Regulator 50 Bar (OFN)

JAVAC EDGE 1 5

- 300 bar maximum inlet pressure.
- 0 - 50 bar (0 - 750 psi) outlet pressure range.
- Suitable for testing systems using R410A and all standard refrigerants, in accordance with BS EN 378.
- 1/4” SAE flare outlet connection to allow for rapid connection to industry standard hoses.
- Large pressure adjustment knob to allow for easy pressure adjustment.

| Description | Part No. |
|---|---|
| Nitrogen Regulator 50 Bar (OFN) | RS-750 |

| | |
|---|---|
| **Max. inlet pressure** | 300 bar |
| **Outlet pressure range** | 0 - 50 bar (0 - 750 psi) |
| **Connector type** | 1/4” outlet flare connection |

Information correct at time of going to press. Not all products are available in all regions.



# Nitrogen Rig

## PRESSURE TESTING RIG WITH ISOLATION VALVE AND GAUGE

JAVAC EDGE 1 5

A complete testing rig specifically designed for high pressure testing in HVAC/R systems using R410A.

- Designed for testing refrigeration systems that use R410A (in accordance with BS EN 378).
- 1/4" SAE flare outlet connection to allow for rapid connection to industry standard hoses.
- Safety relief valve to prevent regulator over-pressurisation.
- Robust rig that is ideally suited to the rigours of daily use.

| Description | Part No. |
|---|---|
| Nitrogen Pressure Testing Rig | RS-750-RIG |

Information correct at time of going to press. Not all products are available in all regions.




# Nitrogen Purge Tool

JAVAC EDGE 1

When performing repairs on refrigeration or air conditioning piping, it is important to purge the inside of the pipe with nitrogen to prevent oxidation in the joint area, both before and during the brazing process.

This tool allows you to initiate the PURGE function at a pre-set regulated flow rate. Then, with a simple turn of the control knob, you can switch to the BRAZE function, which adjusts the flow rate to a level ideal for the brazing process.

This feature helps minimize nitrogen usage while also preventing air from entering the system during the repair.

The tool is designed to attach to a standard nitrogen regulator and comes equipped with a 1/4" SAE flare outlet connection, which is compatible with standard HVAC hoses.

| | |
|---|---|
| Materials of construction | Body: Aluminum<br>Inlet, outlet and internals: Brass |
| Gas service | Nitrogen ( N 2 ) |
| Maximum working pressure<br>Outlet Flow Rate | (as indicated on device)<br>3 L/min (during brazing mode) |
| Operating temperature | -20°C to +50°C |
| Weight (kg) | 0.110 |
| Dimensions (W,L,D) | 38 x 80 x 30 mm |
| Outlet | 1/4" SAE |

| Description | Part No. |
|---|---|
| Nitrogen Purge Tool | JAV-1444 |
| Nitrogen Regulator RS-750 | RS-750 |

Information correct at time of going to press. Not all products are available in all regions.

# Access Valves & Core Tools

JAVAC 1



SU-04



SU-05



S-209

| Description | Part No. |
|---|---|
| Valve core removal tool | S-209 |
| Schrader Valve 1/4” | SU-04 |
| Schrader Valve 5/16” – R410A | SU-05 |

# Ball Valves & Adpators

JAVAC 1



EL33021



EL33023



EL30035 / EL30036

| Description | Part No. |
|---|---|
| Ball Valve R410A 5/16”, 1/4 turn | EL33023 |
| Set of 3 Ball Valves (RBY) 1/4” SAE | EL33021 |
| 1/4” female flare x 1/4” male flare auto shut off | EL30035 |
| Adaptor 5/16 to 1/4 for R410A | EL30036 |

# 10kg Cylinder Adaptor

JAVAC EDGE 1 A2L



| Description | Part No. |
|---|---|
| 10KG Cylinder Adaptor L/H R32 | JAV-CA04218 |

Information correct at time of going to press. Not all products are available in all regions.



# 04 BRAZING & WELDING


| | |
|---|---|
| Brazing & Welding Kits | 90 |
| Brazing & Welding Torches | 91-93 |
| Heat Blockers & Accessories | 94 |


ASPEN PUMPS GROUP




# Oxy-acetylene Brazing & Welding Tool Kit

JAVAC EDGE 1


Oxygen regulator


Acetylene regulator


Flashback arrestors


Brazing Torch and Mixer


Pair of 5 m Hoses


Lightweight nozzles


Pistol Grip Spark Lighter


Cylinder spanner


Multi head spanner


Nozzle Cleaning Set

| Description | Part No. |
|---|---|
| Tool kit | F23220001 |

*Kit includes:*
*Oxygen Regulator x 1, Acetylene Regulator x 1, Brazing Torch and Mixer x 1, Pair of 5 m Hoses x 1, Flip Up Brazing Goggles x 1 Lightweight Nozzles (Assorted Sizes) x 1, Pistol Grip Spark Lighter x 1, Cylinder Spanner x 1, Multi Head Spanner x 1 Nozzle Cleaning Set x 1, Pair Of Flashback Arrestors x 1*

## Bottle Trolley



JAVAC 1

| Description | Part No. |
|---|---|
| *Oxygen and Acetylene Bottle Trolley 5 & 10L* | 9431380 |

Information correct at time of going to press. Not all products are available in all regions.




# Olympus

**BRAZING & WELDING TORCH**

JAVAC 1

- Stainless steel nozzle
- Trigger start
- Variable flame control
- 360º swivel tip
- For use with MAPP and Propane gas

| Description | Part No. |
|---|---|
| Olympus | OLY2 |

# S2 Brazing Rods

JAVAC 1

- Premium grade S2 self-fluxing solder copper phosphorus alloy brazing rods
- Suitability copper-copper and high copper content alloys
- Melting range Solidus - 645°C, Liquidus - 850°C
- 1kg Pack. 500mm long
- Made in the UK

| Description | Part No. |
|---|---|
| Brazing Rods | JAV-S2 |



Information correct at time of going to press. Not all products are available in all regions.



# Fusion Dual

**BRAZING & WELDING TORCH**

JAVAC 1

- Stainless steel nozzle
- Manual ignition
- Double barrel
- Variable control swirl flame
- For use with MAPP & Propane Gas
- High temperature, faster brazing
- 360° Swivel Tip

| Description | Part No. |
|---|---|
| Fusion Dual | FD-2 |

# Bottle Trolley

JAVAC 1



| Description | Part No. |
|---|---|
| Oxygen and Acetylene Bottle Trolley 5 & 10L | 9431380 |

Information correct at time of going to press. Not all products are available in all regions.





# Flexi Torch

## BRAZING & WELDING TORCH

JAVAC

- Trigger start ignition
- Flexible 205mm stainless steel burner tube
- Access hard to reach places
- Tube stays cool throughout use
- Swirl flame
- For use with MAPP & Propane
- 800 – 1300ºC



| Description | Part No. |
|---|---|
| Flexi Torch | JAV-1104 |

Information correct at time of going to press. Not all products are available in all regions.




# Heat Shield

## HEAT BLOCKING COMPOUND

JAVAC 1

A reusable putty designed to protect sensitive parts from heat damage during brazing, soldering and welding. No more need for messy wet rags!

- Apply, remove and reuse - up to 40 times!
- Handy colour changing putty shows you when you need to replace the pot.

| Description (Boxes of 12) | Part No. |
|---|---|
| Heat Shield – EN | JAV-1002 |
| Each tub: net weight 325g, 92 x 67mm | |

# PyroCool®

## FLAME RETARDANT GEL

Advanced A

Ready to use

Aerosol

Concentrate

Condensate pump safe

- Protects all surfaces and parts close to brazing, soldering and welding
- Reduces risk of fire by protecting surfaces and dissipating heat
- Suitable for copper, steel and aluminium pipework

| Part No. | Product | Qty | Box Qty | Size |
|---|---|---|---|---|
| S050021GB | PyroCool | 1 | 8 | 500ml |
| S050004GB | PyroCool | 1 | 8 | 1L |




Information correct at time of going to press. Not all products are available in all regions.

# 05 LEAK DETECTION


| | |
|---|---|
| Refrigerant | 96-97 |
| Sprays | 98 |
| Ultra Violet | 99-102 |


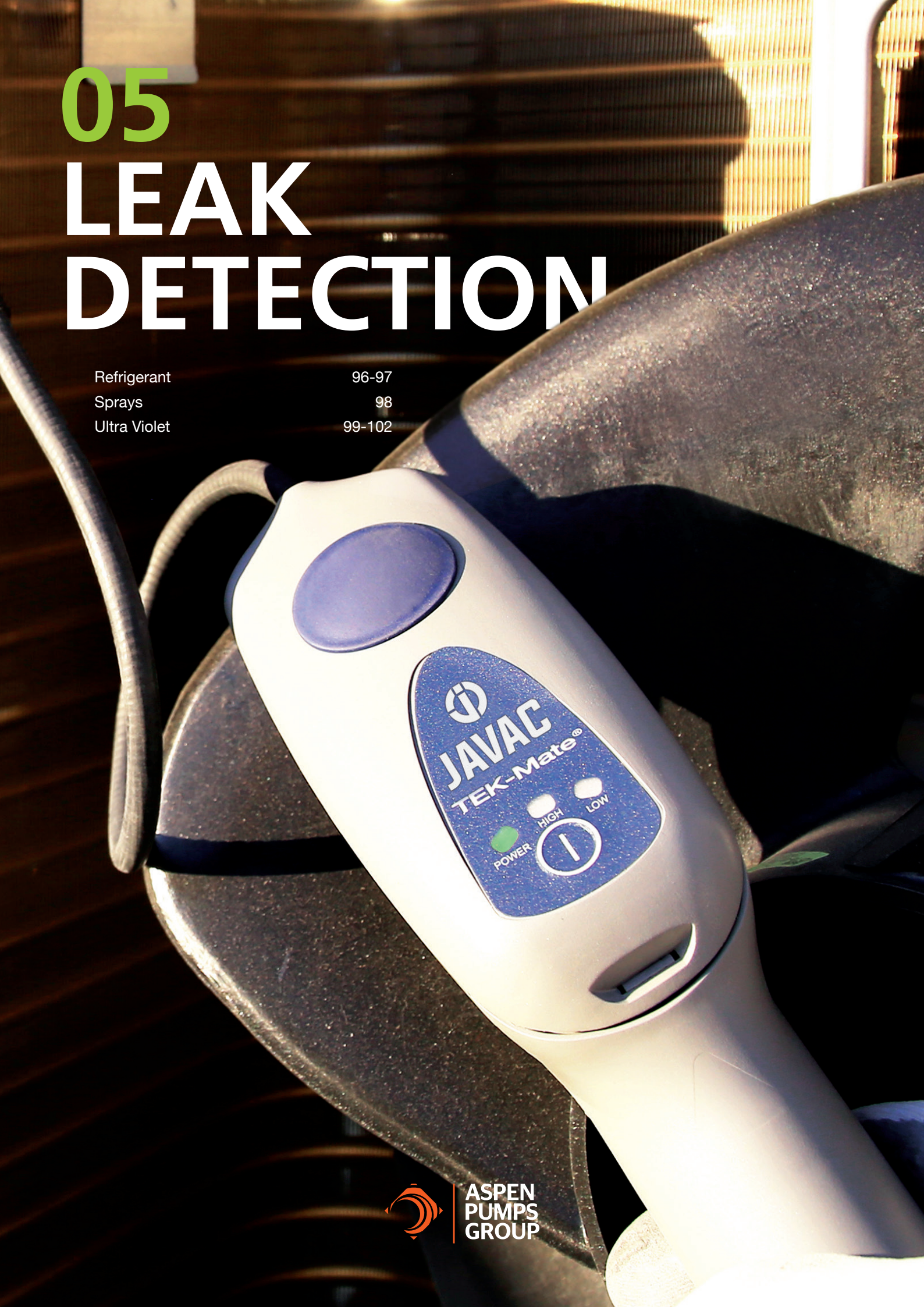


ASPEN PUMPS GROUP




JAV-1283

# D-Tek 3®

## REFRIGERANT GAS LEAK DETECTOR

Detects all HCFCs, HFCs, HFOs, blends (including A2Ls), ammonia & SF6.

- Ultra high sensitivity to all standard refrigerant gases, 1gm/yr
- Compatible with optional CO2 sensor and flammable refrigerant sensor
- Longest sensor life in the industry

| Description | Part No. |
|---|---|
| D-Tek 3 Leak detector | JAV-1283 (721-202-G1) |

| Suggested spare | Part No. |
|---|---|
| TEK-Check® reference leak | 703-080-G10 |

Verifies the functionality of your leak detector. R134A reference leak.5g of refrigerant. Leak rate 5-9 grams per year at 20 Deg C. Easy to store.




718-202-G21

# Gas-Mate®

## HYDROCARBON & TRACE-A-GAS™ COMPATIBLE

- Twice as sensitive as the nearest competitor
- Trace-A-Gas™ sensitivity hydrogen 5 grams a year
- Also detects natural gas, propane, butane, cyclopentane, ethane, ethanol, isobutane and ammonia – R1234YF, R1234ZE, R32, R290, R600
- A2L & A3 ready
- Adjustable sensitivity helps pinpoint leaks fast
- Auto-zeroing for ignoring background gas levels in leak test area.
- Certified intrinsically safe by MET Laboratories for use in combustive / explosive environments

| Description | Part No. |
|---|---|
| Gas-Mate | 718-202-G21 |

| Suggested spares | |
|---|---|
| Sensor | 706-700-G1 |

Information correct at time of going to press. Not all products are available in all regions.




705-202-G21

# Tek Mate®

## REFRIGERANT GAS LEAK DETECTOR

- F-GAS Compliant, tested to BS EN 14624.
- Controls soft touch switch-off, low sensitivity, high sensitivity.
- Contamination adjustment – automatic.
- R22: 2g / yr.

| Description | Part No. |
|---|---|
| TEK-Mate | 705-202-G21 |

| Suggested spares | Part No. |
|---|---|
| Filter for TEK-Mate | 705-600-G1 |
| Spare sensor for TEK-Mate | 703-020-G1 |




724-202-G21

# D-Tek Stratus®

## REFRIGERANT GAS LEAK DETECTOR

- 4-point sensitivity settings in pinpoint mode (super, high, medium & low)
- New lithium ion battery with quick charge capability and easy field replacement
- Manual zero mode allows the engineer to zero the detector to background refrigerants
- Comes with an additional extra long probe for hard to reach areas, and multiple-region charging adaptors
- Probe filter (pre installed) can be easily checked and replaced, and redesigned infrared sensor has the longest life in the industry
- Detects all CFCs, HCFCs, HFCs, and HFOs
- Designed for ergonomic comfort with rugged carrying case and comes with a two-year replacement warranty

| Description | Part No. |
|---|---|
| D-TEK Stratus (inc.case) | 724-202-G11 |

Information correct at time of going to press. Not all products are available in all regions.

# RTU® BU

## BUBBLE-UP LEAK DETECTOR

Ready to use
Aerosol
Concentrate
Condensate pump safe

- Specifically designed for refrigerant leaks
- Produces long-lasting bubbles
- Clings to all surfaces

| Part No. | Product | Qty | Size |
|---|---|---|---|
| S010173GB | RTU BU | 8 | 1L |

**Hazardous transport.**




# EasyFind®

## BUBBLE-UP LEAK DETECTOR

Ready to use
Aerosol
Concentrate
Condensate pump safe

- Specifically designed for refrigerant leaks
- Produces long-lasting bubbles
- Clings to all surfaces

| Part No. | Product | Qty | Size |
|---|---|---|---|
| S010350GB | EasyFind | 12 | 400ml |

**Hazardous transport.**




Advanced

Information correct at time of going to press. Not all products are available in all regions.

# Injection




PATENTED DYE

2 IN 1 Solution

JAV-1421

## Glo Seal™

**UV DYE & SEALANT – INJECTION**

SPECTROLINE HVAC/R | S-M | NSF

Works to pinpoint the exact location of all leak areas and seals AC&R micro-leaks from the inside.

The Spectroline patented dual pivoting adapter easily switches from 5/16" or 1/4" flare fittings, making it a versatile tool to keep on hand.

- Works with all popular refrigerants and oils
- Non-polymer, oil-soluble formula safe for system components and recovery equipment
- Remains safely in system to help protect against future leaks highly concentrated to see all leaks glowing brightly




JAV-1420

| Dosage | Treats (cooling) |
|---|---|
| 10ml | 0.5 - 2.5 tons of cooling (1.76 - 8.79 kW) |

| Description | Part No. |
|---|---|
| Glo Seal™ 10ml Syringe Injector – Single Use | JAV-1421 |
| Glo Seal™ 10ml Syringe Injector & Adapter | JAV-1420 |

*Kit includes:*
*2 x Single use syringe injector (10 ml)*
*1 x Patented dual adapter (1/4" flare - 5/16" flare)*

Information correct at time of going to press. Not all products are available in all regions.

# Injection




JAV-1103



Inject dye with a turn of the handle.

## Cool Seal™

### AC LEAK SEALANT – INJECTION

SPECTROLINE® HVAC/R | S-M | NSF

Seals micro leaks in condensers, evaporators, o-rings and hoses

- Can add years to older, out-of-warranty AC&R systems that leak small amounts of refrigerant
- Works with all popular refrigerants and oils
- Remains safely in system to help protect against future leaks




JAV-1106




JAV-1103

| Description | Part No. |
|---|---|
| Cool Seal, 1 x 15ml (CS-1CS) | JAV-1103 |
| Cool Seal Kit (CS-100CS) | JAV-1106 |
| *Kit includes:*<br>*2 x 15ml Cool Seal A/C leak sealer cartridges*<br>*1 x Injector assembly*<br>*1 x 20cm hose assembly with low-loss fitting & check valve*<br>*1 x R-410A adapter; service labels* | |

| Dosage | Treats (cooling) |
|---|---|
| 15ml | up to14kW |
| 60 ml | up to 56kW |

Information correct at time of going to press. Not all products are available in all regions.

# Injection




PATENTED DYE

JAV-1156 EZ-Ject Complete Kit



Inject dye with a turn of the handle.

## EZ-Ject™

### FLUORESCENT DYE LEAK DETECTION – INJECTION



JAV-1154



JAV-1155



JAV-1210EZ-25

The revolutionary way to add fluorescent dyes into air conditioning and refrigeration systems – without the use of additional refrigerant, manifold and additional hoses. No pouring and no refrigerant required for injection.

- Spectroline dyes glow brighter than the competition
- One calibrated cartridge provides exact dosing for multiple systems
- Easily overcomes system pressure up to 450 psi (31 bar)

| Dosage | Treats (lubricant / refrigerant) |
|---|---|
| 15ml | up to 7.6L / Up to 11.3kg |

| Description | Part No. |
|---|---|
| EZ-Ject Complete Kit (SPE-HVLEZE) | JAV-1156 |
| *Kit includes: 2 x 15ml EZ-Ject Universal/POE dye cartridge, 1 x Dye injector assembly, 1 x 20cm hose assembly with low-loss fitting & check valve, 1 x R-410A adapter; service labels, 1 x Violet light LED leak detection lamp, 1 x Fluorescence-enhancing glasses, 1 x 60ml Glo-Away Plus dye cleaner, 3 x Drip plugs; Service labels* | |
| EZ-Ject Kit (SPE-EZ100E-CS) | JAV-1154 |
| *Kit includes: 2 x 15ml Universal/POE dye cartridge, 1 x Dye injector assembly, 1 x 20cm hose assembly with low-loss fitting & check valve* | |
| Universal/POE dye cartridge (SPE-EZ5E-CS) | JAV-1155 |
| 20cm hose assembly with low-loss fitting & check valve | JAV-1210 |

Information correct at time of going to press. Not all products are available in all regions.




# Violet light LED

## FLUORESCENT LEAK DETECTION LAMP

SPECTROLINE HVAC/R | 8m




JAV-1176

Economical and powerful, cordless leak detection lamp. Reveals even the smallest refrigerant leaks! Universal/POE dyes only.

- Provides optimal fluorescent dye response and contrast
- Pre-focused beam optimizes fluorescent response
- Compact design easily gets into tight, cramped spaces
- Rugged, corrosion-resistant anodized lamp body delivers years of heavy use
- Anti-roll cuff

| Description | Part No. |
|---|---|
| Violet light LED leak detection lamp (SPE-HVL-CS) | JAV-1176 |
| *Kit includes:*<br>*1 x Violet Light LED Leak Detection Lamp*<br>*3 x AAA batteries*<br>*1 x Fluorescence-enhancing glasses* | |

| | |
|---|---|
| Sensitivity | up to 8m |
| Power | 3 x AAA batteries (included) |
| Run time | up to 5hrs |

NOTE: For most applications, our violet light lamp does not require fluorescence enhancing glasses.

Information correct at time of going to press. Not all products are available in all regions.

# 06 BRASS & COPPER FITTINGS





| | |
|---|---|
| About C&D | 104-105 |
| Service Kits | 106-108 |
| Smartlock | 109-110 |


ASPEN PUMPS GROUP



For more than 20 years, we have engineered industry-leading fittings designed for reliability, durability, and long-term performance. Every product exceeds current standards and is built to withstand the most demanding applications.

Our unmatched warranty is supported by comprehensive technical expertise, helping customers identify root causes, resolve issues efficiently, and achieve better outcomes for all stakeholders. We stand firmly behind our fittings as the best-engineered solution available.

With a comprehensive product range, strong local stock availability, and the fast, dependable delivery Aspen is known for, C&D fittings are the smart, trusted choice for professionals who refuse to compromise. Proven in the toughest environments for over two decades, they deliver performance you can rely on.

Developed by the experts at Sky Refrigeration Limited, these fittings were engineered in Australia - home to some of the harshest refrigeration conditions in the world - ensuring exceptional durability, performance, and reliability in any environment.

Now part of the Aspen Pumps Group, Sky's 20-year legacy of innovation and quality continues, exclusively available across the UK and EU under the C&D brand.

This catalogue provides a comprehensive overview of each fitting, highlighting key features and benefits to give you the knowledge and confidence to sell effectively.

**Trusted quality in every connection.**





Scan here
for full range:




2026 Catalogue out now!



Information correct at time of going to press. Not all products are available in all regions.

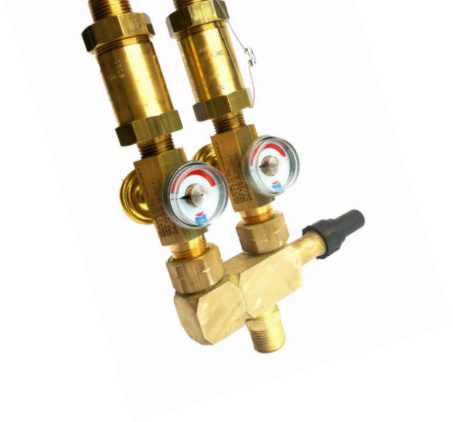





# Compliance you can count on

## C&D Copper & Brass Fittings:

Choosing the right fittings for HVAC/R systems is essential, as high-quality, standards-compliant components have a direct impact on system performance, reliability, and lifespan. C&D copper and brass fittings are engineered and manufactured to meet the highest international standards, providing outstanding strength, precision, and durability. Specifically designed for HVAC/R applications, these fittings deliver secure connections, superior leak resistance, and long-term operational efficiency. Backed by advanced engineering and strict quality control, C&D fittings provide lasting performance and complete peace of mind.



## Standards & Compliance:

At C&D, we understand that compliance is key to safety, reliability, and customer trust.
That's why all of our fittings are tested and certified to meet or exceed the latest standards, including:

- **PED 2014/68/EU** – Pressure Equipment Directive
- **EN 12420 CW617N** – Hot-forged brass fittings
- **BS EN 1982:1999** – Machined brass fittings
- **ISO 5149.2** – Refrigerating systems and heat pumps safety requirements
- **EN 14585:2006** – Copper and copper alloy fittings
- **AS5149.2, EN1254-1, EN1254-5, EN14276, EN378-2** - Copper Iron Fittings
- **RoHS Directive** – Full compliance ensuring environmentally safe materials

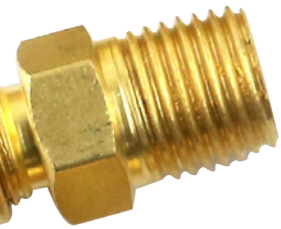

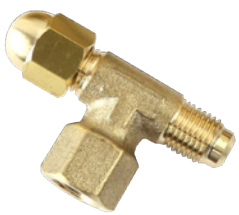



Information correct at time of going to press. Not all products are available in all regions.




# Schrader Fittings Kit

## Key Features

- Handy refillable case with the most commonly used fittings
- Dedicated kit for Schrader access fittings
- Refill packs available

| Complete Kit Part No. | Kit Includes | Refill Pack Part No. | Qty per pack |
|---|---|---|---|
| **CD-200-KIT-1** | Schrader Union – 1/4" SCHR x 3 Steps 3/16" ID x 1/4" & 3/8" OD includes cap & core | CD-209-0403-3 | x 5 |
| | Schrader Union – 1/4" SCHR x 1/4" CU Tail includes tool, cap & core | CD-208-0404 | x 5 |
| | Schrader Union Assembly – 1/4" SCHR x 1/8" NPT incl. cap & core | CD-207-0402 | x 5 |
| | Schrader Union Assembly – 1/4" SCHR x 1/4" NPT incl. cap & core | CD-207-0404 | x 5 |
| | Schrader Union – 410A – 5/16" SCHR – 1/4" CU Tail incl. cap & core | CD-208-0504 | x 2 |
| | Schrader Swivel Tee (Brass) – 1/4" FSAE x 1/4" SCHR x 1/4" SCHR incl. cap & core | CD-213-040404 | x 2 |
| | Schraeder valve swivel branch 1/4" access T incl. cap & core | CD-214-040404D | x 2 |
| | 1/4" Flare Schrader cap no tool | CD-205-4 | x 5 |
| | Schrader Valve Core – 410A | CD-204-1 | x 10 |




CD-209-0403-3


CD-208-0404


CD-207-0402


CD-207-0404


CD-208-0504


CD-213-040404


CD-214-040404D


CD-205-4


CD-204-1


Refill packs supplied in euro hook bags

Information correct at time of going to press. Not all products are available in all regions.




# Flare Nut Kit

- Handy refillable case with the most commonly used fittings
- Dedicated kit for flare nuts
- Refill packs available



| Complete Kit Part No. | Kit Includes | Refill Pack Part No. | Qty per pack |
|---|---|---|---|
| **CD-200-KIT-2** | Flared Copper Washer 1/4" | CD-109-04 | x 10 |
| | Flared Copper Washer 3/8" | CD-109-06 | x 10 |
| | Flared Copper Washer 1/2" | CD-109-08 | x 10 |
| | Flared Copper Washer 5/8" | CD-109-10 | x 10 |
| | Flared Copper Washer 3/4" | CD-109-12 | x 10 |
| | Flare Nut Short Barrel 1/4" FSAE | CD-201-0404 | x 10 |
| | Short Barrel Brass Flare Nut – 5/16" FSAE | CD-201-0505 | x 10 |
| | Short Barrel Brass Flare Nut – 3/8" FSAE | CD-201-0606 | x 10 |
| | Short Barrel Brass Flare Nut – 1/2" FSAE | CD-201-0808 | x 6 |
| | Short Barrel Brass Flare Nut – 5/8" FSAE | CD-201-1010 | x 2 |
| | Short Barrel Brass Flare Nut – 3/4" FSAE | CD-201-1212 | x 2 |
| | Forged Reducing Flare Nut – 3/8" FSAE x 1/4" | CD-201-0604 | x 4 |


CD-109-04


CD-109-06


CD-109-08


CD-109-10


CD-109-12


CD-201-0404


CD-201-0505


CD-201-0606


CD-201-0808


CD-201-1010


CD-201-1212


CD-201-0604


Refill packs supplied in euro hook bags

Information correct at time of going to press. Not all products are available in all regions.

# Co2 130 Bar Brass & Schrader Kit




- Handy refillable case with the most commonly used fittings.
- Dedicated kit for Schrader access fittings and 130 bar CO2
- Refill packs available



| Complete Kit Part No. | Kit Includes | Refill Pack Part No. | Qty per pack |
|---|---|---|---|
| **CD-200-KIT-3** | Schrader core 130 bar | CD-204-1-HP | x 10 |
| | 1/4" SAE Cap 130 bar | CD-275-04 | x 10 |
| | 3/8" SAE Cap 130 bar | CD-275-06 | x 5 |
| | Schrader Union Assy- 1/4 SCHR x 1/8 NPT incl. cap & core 130 bar | CD-207-0402-HP | x 5 |
| | Schrader Union Assy - 1/4 SCHR x 1/4 NPT incl. cap & core 130 bar | CD-207-0404-HP | x 5 |
| | Schrader Union – 1/4 SCHR x 3 Steps 3/16 ID x 1/4 & 3/8 OD incl. cap & core 130 bar | CD-209-0403-3-HP | x 5 |
| | Schrader Union 1/4 Schr (1/4 ID spiggot) 130 bar | CD-209-0404-HP | x 5 |
| | Schrader Union 1/4 Schr (3/8 ID spiggot) 130 bar | CD-209-0406-HP | x 5 |
| | 1/4 Schrader x 1/4 SCH x 1/4 FSAE fixed 130 bar | CD-215-040404-XHP | x 4 |
| | 1/4MSAE x 3/8 ID solder 130 bar | CD-218-0406 | x 4 |
| | Flared Copper Washer 1/4" | CD-109-04 | x 10 |


CD-204-1-HP


CD-275-04


CD-275-06


CD-207-0402-HP


CD-207-0404-HP


CD-209-0403-3-HP


CD-209-0404-HP


CD-209-0406-HP


CD-215-040404-XHP


CD-218-0406


CD-109-04


Refill packs supplied in euro hook bags

Information correct at time of going to press. Not all products are available in all regions.

# Smartlock

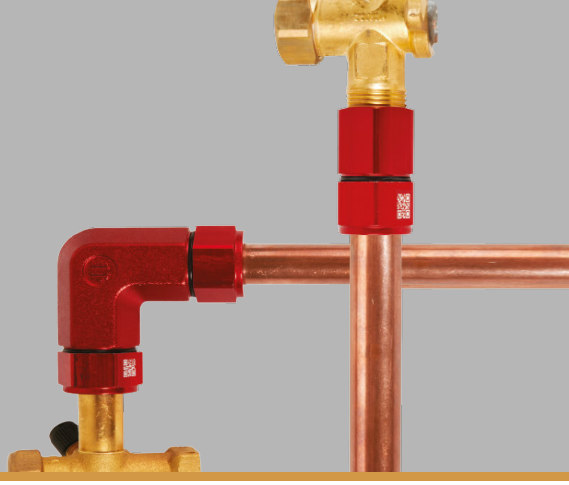

HVAC/R Compression Fitting for all refrigerant lines.

- Positioning strip aligns all components for easy insertion of tube
- Compatible with all refrigerants
- No limit on pressure and temperature range due to metal to metal sealing technology
- Over torque prevention design




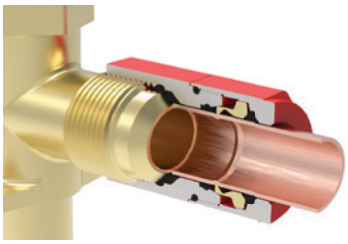

## Metal to Metal Seal Technology

- Vibration dampening
- Permanent solution
- 10 year warranty




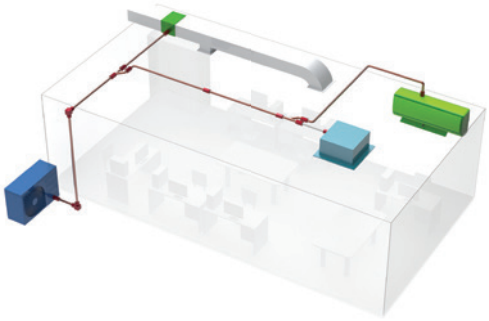

| TECHNICAL SPECIFICATIONS | |
|---|---|
| Materials of construction | Aluminium alloy |
| Compatible with | ALL refrigerants |
| Wide temperature range | -40°C to 150°C |
| Compatible tube materials | Copper tube (hard & soft) |
| | Aluminium tubes |

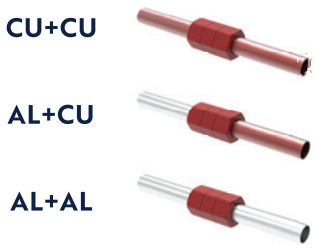


**NO**

**BRAZING | FLARING | WELDING**
**FIRE HAZARD | HOT WORK PERMIT**
**SPECIAL GAUGE | SPECIAL TOOL**
**OXIDATION | NITRO PURGING**

**ONE SIMPLE SOLUTION**

## High Pressure Range

| SIZE | DESIGN PRESSURE | BURST PRESSURE |
|---|---|---|
| 1/4" | 1700psi | 9700psi |
| 3/8" | 1600psi | 8500psi |
| 1/2" | 1300psi | 8000psi |
| 5/8" | 1300psi | 6800psi |
| 3/4" | 1000psi | 5100psi |
| 7/8" | 960psi | 4800psi |

SMARTLOCK
Brazeless & Flareless Fittings

Information correct at time of going to press. Not all products are available in all regions.

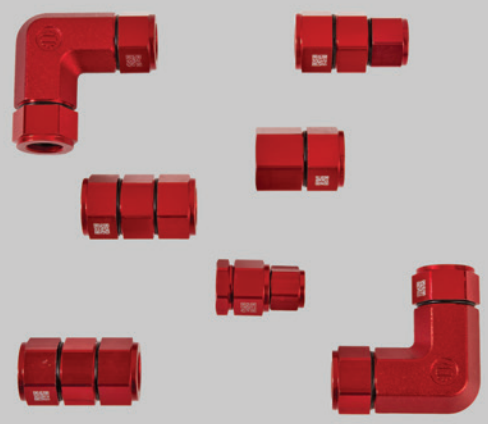

# Smartlock

## Flare Connector Multi Angle

| Size | Part no. |
|---|---|
| 1/4" | FCMA1400 |
| 3/8" | FCMA3800 |
| 1/2" | FCMA1200 |
| 5/8" | FCMA5800 |
| 3/4" | FCMA3400 |



## Union Straight

| Size | Part no. |
|---|---|
| 1/4" | UNST1400 |
| 3/8" | UNST3800 |
| 1/2" | UNST1200 |
| 5/8" | UNST5800 |
| 3/4" | UNST3400 |
| 7/8" | UNST7800 |



## Flare Connector Reducer

| Size | Part no. |
|---|---|
| 1/2" – 3/8" | FCRS1238 |



## Union Reducer

| Size | Part no. |
|---|---|
| 3/8" – 1/4" | UNRD3814 |
| 1/2" – 3/8" | UNRD1238 |
| 5/8" – 1/2" | UNRD5812 |
| 3/4" – 5/8" | UNRD3458 |
| 7/8" – 3/4" | UNRD7834 |



## Swage Union

| Size | Part no. |
|---|---|
| 3/8" | SWUN3800 |
| 5/8" | SWUN5800 |
| 3/4" | SWUN3400 |
| 7/8" | SWUN7800 |



## Elbow Union

| Size | Part no. |
|---|---|
| 1/2" | ELUN1200 |
| 5/8" | ELUN5800 |
| 3/4" | ELUN3400 |
| 7/8" | ELUN7800 |



## Elbow Swage Union

| Size | Part no. |
|---|---|
| 3/8" | ELSW3800 |
| 5/8" | ELSW5800 |
| 3/4" | ELSW3400 |
| 7/8" | ELSW7800 |



SMARTLOCK
Brazeless & Flareless Fittings

Information correct at time of going to press. Not all products are available in all regions.

# 07 SUPPORT & MOUNTING




| | |
|---|---|
| Rubber Feet | 112-114 |
| PVC Mounting Blocks | 115 |
| Support Feet | 116-118 |
| Heat Pump Kit | 119 |
| Metal Frames | 120-123 |
| Wall Brackets | 124-127 |
| Roof Brackets | 128 |
| Anti-Vibration Dampers | 129-131 |
| Anti vibration pads & strips | 132 |
| Trays | 133 |
| Accessories | 134 |


ASPEN PUMPS GROUP

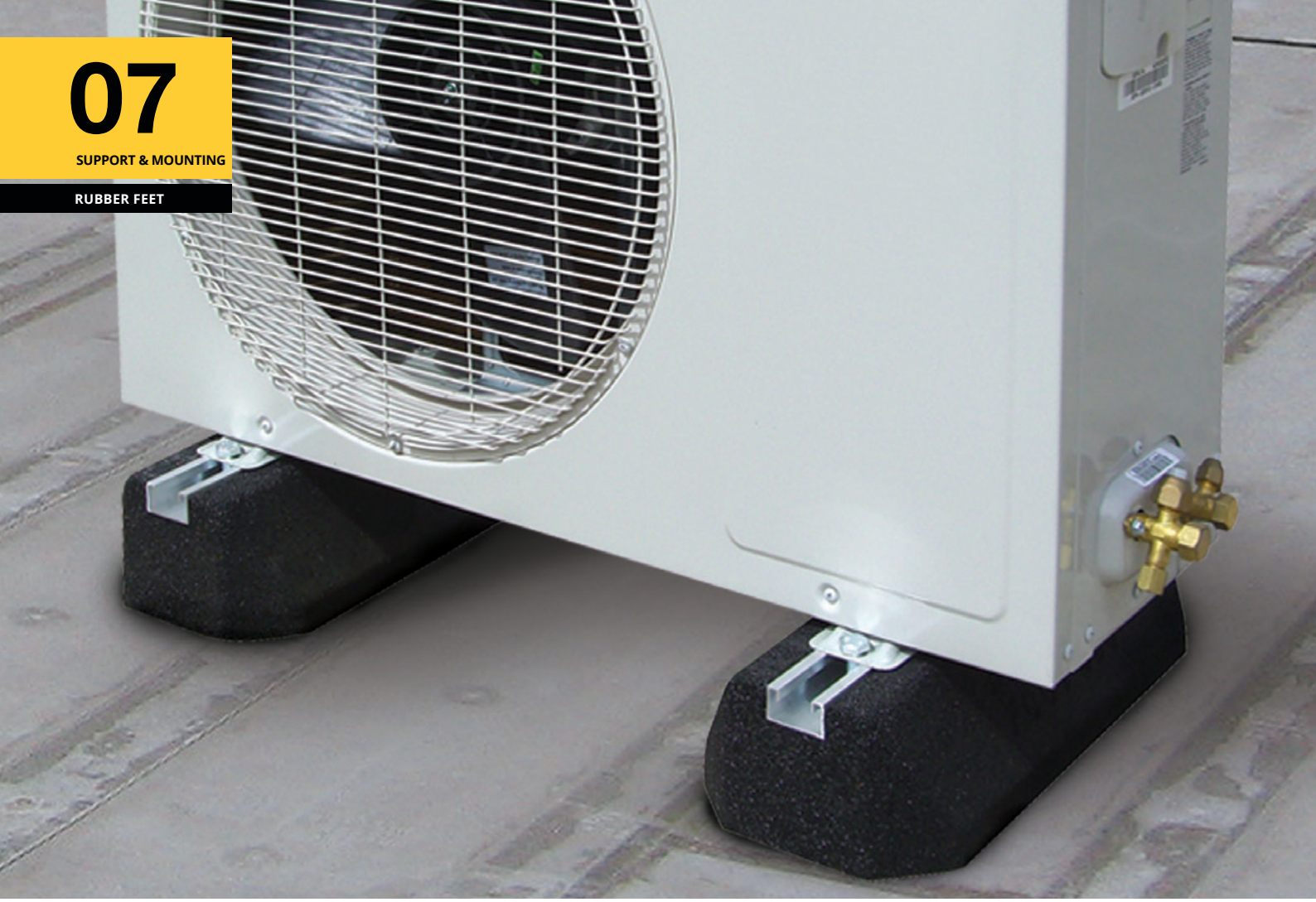

# Premium Fix-It Foot

The neat and tidy rubber Fix-it Foot is simple, durable and comes in a variety of sizes. Extra clearance can be created using a High Bloc which fits underneath. Strapped per pair, and including bolt set.

BIG FOOT® SYSTEMS

## KEY FEATURES ↓

- ✓ Quick and easy installation
- ✓ Aluminium channel firmly anchored at the top for easy attachment of services.
- ✓ Durable recycled rubber reduces vibration and adds stability.
- ✓ Rail size 40x21mm

| Product Code | Size | Profile (mm) | Height (mm) | Width (mm) | Weight (Kg) | Max. Load (Kg) | Pallet Qty |
|---|---|---|---|---|---|---|---|
| B0084 | 250 | 40 | 95 | 180 | 2.4 | 82 | 68 |
| B0085 | 400 | 40 | 95 | 180 | 3.5 | 128 | 60 |
| B0386 | 600 | 40 | 95 | 180 | 5.8 | 224 | 40 |
| B0134 | 1000 | 40 | 95 | 180 | 9.9 | 295 | 28 |

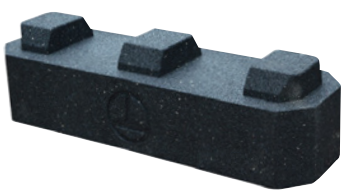



The neat and tidy rubber Fix-it Foot is simple, durable and comes in a variety of sizes. Extra clearance can be created using a High Bloc which fits underneath.

Information correct at time of going to press. Not all products are available in all regions.



# Fix-it Foot & High Bloc

The neat and tidy rubber Fix-it Foot is simple, durable and comes in a variety of sizes. Extra clearance can be created using a High Bloc which fits underneath.

BIG FOOT® SYSTEMS

## KEY FEATURES ↓

- ✓ Quick and simple install.
- ✓ Aluminium channel securely anchored in top for easy fixing of services.
- ✓ Wide range of height and length options available.
- ✓ Durable recycled rubber reduces vibration and adds stability.

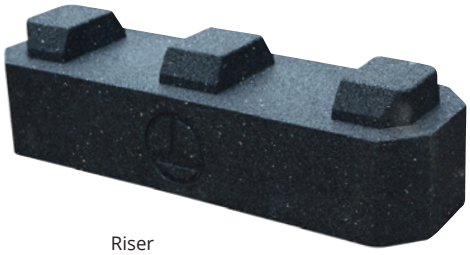

Riser



Fix-it Foot

| Description | Product Code | Length (mm) | Width (mm) | Height (mm) | Weight (Kg) | Max. Load (Kg) |
|---|---|---|---|---|---|---|
| 250 | B6735 | 250 | 180 | 95 | 2.4 | 82 |
| 400 | B6736 | 400 | 180 | 95 | 3.5 | 128 |
| 600 | B6737 | 600 | 180 | 95 | 5.8 | 224 |
| 1000 | B9096 | 1000 | 180 | 95 | 9.9 | 295 |
| 250 Low | B9043 | 250 | 130 | 50 | 1.3 | 82 |
| 400 Low | B9045 | 400 | 130 | 50 | 2.1 | 128 |
| 500 Low | B9368 | 500 | 130 | 50 | 2.5 | 134 |
| 600 High Bloc | B6974 | 600 | 180 | 120 | 10.2 | 224 |
| 1000 High Bloc | B6973 | 1000 | 180 | 120 | 17.7 | 295 |

Information correct at time of going to press. Not all products are available in all regions.

# Optima Slim Fix-It Foot

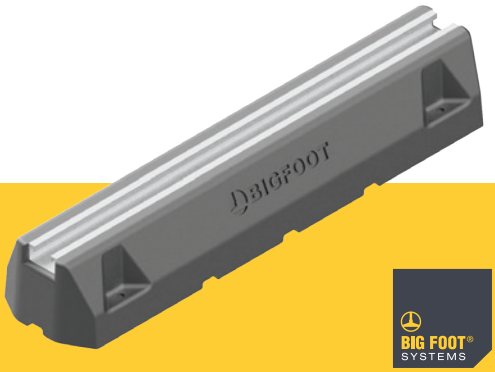


## KEY FEATURES ↓

- ✓ Quick and simple install.
- ✓ Aluminium channel securely anchored in top for easy fixing of services.
- ✓ Durable recycled rubber reduces vibration and adds stability.
- ✓ Rail available in two sizes: 40x21mm or 20x15mm

BIG FOOT® SYSTEMS

The neat and tidy rubber Fix-it Foot is simple, durable and comes in a variety of sizes. Strapped per pair, and including bolt set.

| Product Code | Size | Profile (mm) | Height (mm) | Width (mm) | Weight (Kg) | Max. Load (Kg) | Pallet Qty |
|---|---|---|---|---|---|---|---|
| B0085-S20 | 400 | 20 | 95 | 135 | 5.7 | 180 | 90 |
| B0386-S20 | 600 | 20 | 95 | 135 | 8.5 | 300 | 66 |
| B0134-S20 | 1000 | 20 | 95 | 135 | 13.8 | 350 | 48 |
| B0085-S40 | 400 | 40 | 95 | 135 | 5.5 | 160 | 90 |
| B0386-S40 | 600 | 40 | 95 | 135 | 8 | 265 | 66 |
| B0134-S40 | 1000 | 40 | 95 | 135 | 13 | 310 | 48 |

Information correct at time of going to press. Not all products are available in all regions.

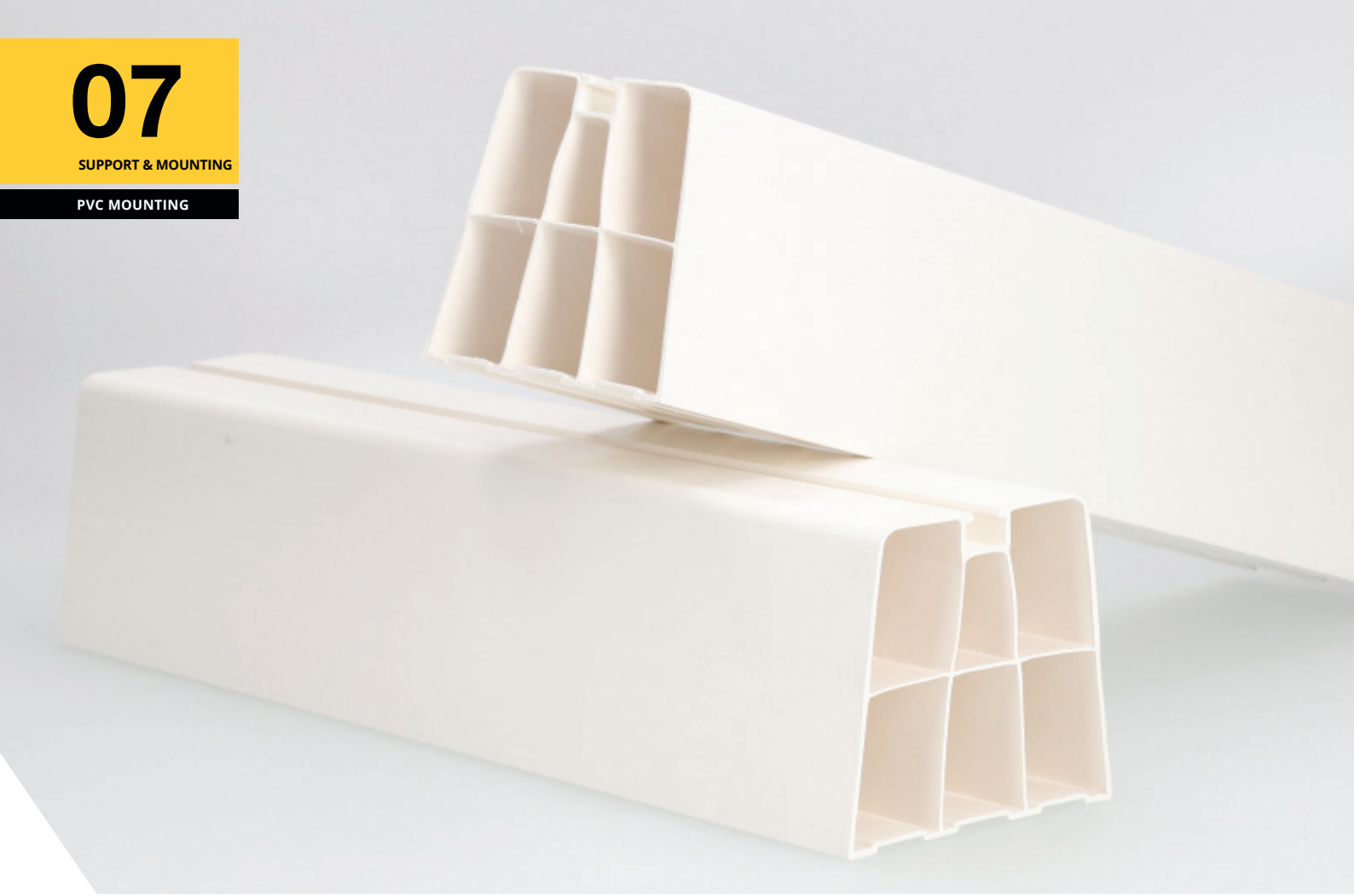

# CONDENSER GROUND BLOCKS

Floor bases made of rigid PVC.

| Item code | Dimensions LxH | Max. Load |
|---|---|---|
| P-032-01 | 350 x 80 mm | 140 kg |
| P-031-01 | 450 x 80 mm | 140 kg |
| P-030-01 | 1000 x 80 mm | 140 kg |

# ECO FLOOR BASE

Made of shockproof, UV-resistant plastic, equipped with screws and bolts for fixing to the outdoor unit and adhesive strips for a good fit to the floor.

| Part No. | Dimensions | Max. Load |
|---|---|---|
| 9898-033-01 | L 420 mm | 320 kg |

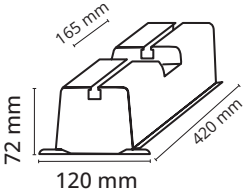





VECAMCO

Information correct at time of going to press. Not all products are available in all regions.

# COEXTRUDED PVC

UV resistant, with soft PVC base. They allow for secure adaptability to the ground, absorbing vibrations from the outdoor unit. Supplied with screws and bolts for securing the machine.

## H 80

| Part No. | | Dimensions | Max. Load |
|---|---|---|---|
| 9898-032- | ☒ | L 350 mm | 380 kg |
| 9898-031- | ☒ | L 450 mm | 380 kg |
| 9898-030- | ☒ | L 1000 mm | 380 kg |

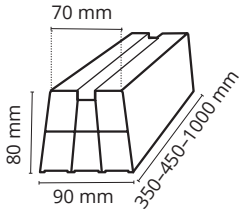


| Part No. | Colour / RAL | |
|---|---|---|
| 08 | ☐ | 9010 |
| 95 | ■ | 9011 |




## H 100

| Part No. | | Dimensions | Max. Load |
|---|---|---|---|
| 9898-037- | ☒ | L 350 mm | 380 kg |
| 9898-036- | ☒ | L 450 mm | 380 kg |
| 9898-035- | ☒ | L 1000 mm | 380 kg |

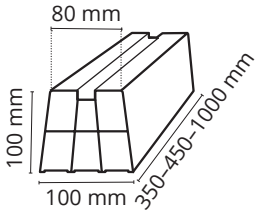


| Part No. | Colour / RAL | |
|---|---|---|
| 08 | ☐ | 9010 |
| 95 | ■ | 9011 |




### CLOSING CAP FOR PVC BASES H 80 MM

| Part No. | | Dimensions |
|---|---|---|
| 9898-029- | ☒ | 90x80 |

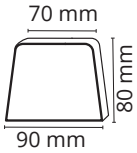




### CLOSING CAP FOR PVC BASES H 100 MM

| Part No. | | Dimensions |
|---|---|---|
| 9898-039- | ☒ | 100x100 |

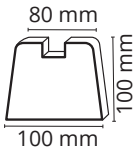


| Part No. | Colour / RAL | |
|---|---|---|
| 08 | ☐ | 9010 |
| 95 | ■ | 9011 |



VECAMCO

Information correct at time of going to press. Not all products are available in all regions.




# H Tech Set 330 & 400mm

Fabricated on site – and accepting a range of strut & box section sizes – the H Tech set is the most flexible choice on the market.

BIG FOOT® SYSTEMS

## KEY FEATURES ↓

- ✓ 50% Higher Coefficient of Friction; better surface to surface grip than rubber feet
- ✓ Maximum stability; EPDM mat conforms better to uneven surfaces than rubber
- ✓ Optimum weight distribution over whole foot print
- ✓ Fits 41 × 41mm strut, 40 × 38mm, 21 × 41mm (H Tech 330mm only)
- ✓ Strut fittings & bolts included
- ✓ 100% recycled glass filled nylon foot construction
- ✓ Optional angled mat accessory for use on uneven ground

| Description | Product Code | Foot Size (mm) | Weight (Kg) | Max. Load (Kg) |
|---|---|---|---|---|
| 330mm Set (paired Foot) | B6088/B | 330 | 2.63 | 300 |
| H Tech 330mm (single Foot) | B6997/B | 330 | 1.1 | 150 |
| Angled Base 330mm 2.5˚ (single Foot) | B6098 | 330 | 0.6 | 150 |
| 400mm Set (paired Foot) | B6089 | 400 | 4.57 | 500 |
| Angled Base 400mm 2.5˚ (single Foot) | BN7105 | 400 | 1.2 | 250 |





* Please note: Strut is not included in kit, and is shown as an example




## KIT INCLUDES ↓

| | |
|---|---|
| Foot with adhered mat | × 2 |
| Bracket & fixings | × 1 |

Information correct at time of going to press. Not all products are available in all regions.



# Multi Foot

Multi Foot is a multi-purpose support for cable tray or pipe. Used with channel, strut or threaded rod, this simple nylon foot is both versatile and economical.

BIG FOOT® SYSTEMS

## KEY FEATURES ↓

- ✓ Quick and easy install.
- ✓ Available in 2 sizes.
- ✓ Rigid nylon foot.
- ✓ Versatile application using channel, strut or threaded rod.
- ✓ Accepts a full range of strut sizes.
- ✓ Adhered rubber mats provide additional roof protection.
- ✓ Boxed for convenience.



| Description | Product Code | Length (mm) | Width (mm) | Height (mm) | Weight (Kg) | Max. Load (Kg) |
|---|---|---|---|---|---|---|
| 400 mm – 4 Pack | B9640 | 400 | 180 | 80 | 6 | 259 |
| 600 mm – 3 Pack | B9655 | 600 | 220 | 80 | 11.7 | 474 |

ALL IN ONE BOX!






* Please note: Strut, channel & rod is not included, and is shown as an example



# Heat Pump Drip Tray

BIG FOOT® SYSTEMS

## KEY FEATURES ↓

- ✓ Drip Tray, Feet and bracket pack all in one box kit
- ✓ Anti vibration Big Foot Fix-It feet 600 included
- ✓ Min 290 / max 340mm ground clearance for better airflow around heat pump
- ✓ High Bloc feet available as optional accessories to increase ground clearance
- ✓ Metal work in RAL9002 (white) RAL9005 (black)
- ✓ Made from 20/10 Galvanised Steel
- ✓ Polyester powder coated finish (approx. 100µm thickness)
- ✓ M8 8.8 zinc passivated carbon steel high strength fixings included

| Description | Product Code | Width (mm) | Height (mm) | Depth (mm) | Working Load (Kg) | Max. Load (Kg) |
|---|---|---|---|---|---|---|
| Heat Pump Drip Tray Kit (white) | B2075 | 940 | Min. 290 / Max. 340 | 420 (Drip Tray) 600 (Feet) | 300 | 300 |
| Heat Pump Drip Tray Kit (black) | B2076 | | | | | |
| Replacement metal tray with hook for brackets (white) | S-096-71 | | – | 420 | – | – |

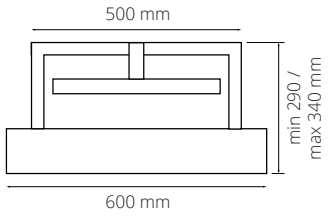


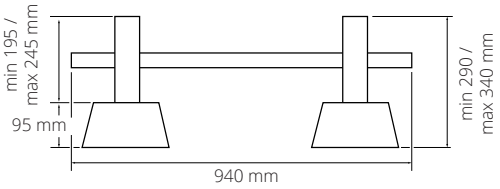




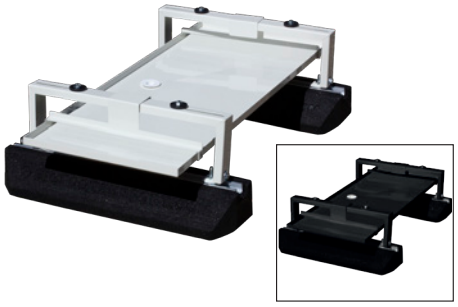

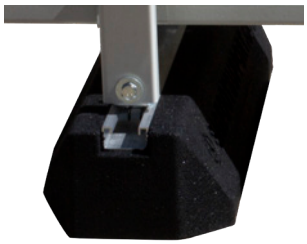

High-Bloc są dostępne jako akcesoria zapewniające większy prześwit.

- Szybka i łatwa instalacja



Information correct at time of going to press. Not all products are available in all regions.



# Micro & Maxi Frames

The ideal choice for floor support of all types of condensing units, mini-splits, VRV/VRF and heat pumps.

BIG FOOT® SYSTEMS

## ADVANTAGES ↓

- ✓ Suitable for all units.
- ✓ Adjustable length.
- ✓ Adjustable height.
- ✓ Maximum load up to 450 kg.

## PROPERTIES ↓

- ✓ Galvanised frame.
- ✓ Powder coating in Black.
- ✓ Resistant to temperatures from -40˚C to +80˚C
- ✓ Quality assurance in accordance with ISO standards 9001 et ISO 14001.

## OPTIONAL ↓

(Sold separately)

- ✓ Vibration dampers for loads up to 450 kg.
- ✓ Supports for Micro & Maxi bins.

| Description | Reference |
|---|---|
| Micro Frame | **BN8410** |
| Maxi Frame | **BN8411** |
| Maxi Tray Support | **BN8412** |
| Micro Tray Support | **BN8413** |

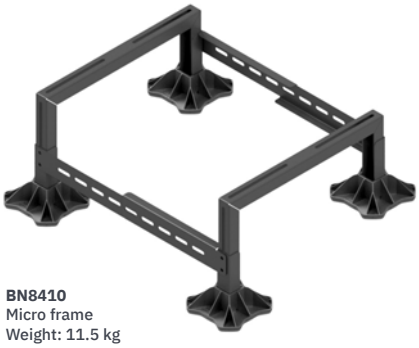

**BN8410**
Micro frame
Weight: 11.5 kg

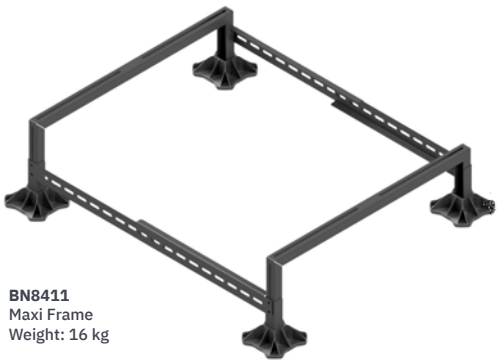

**BN8411**
Maxi Frame
Weight: 16 kg

## OPTIONNELS ↓

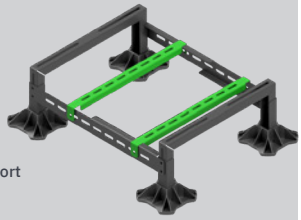

**BN8412**
Maxi Tray Support
Weight: 5.2 kg



**9898-040**
Support Anti Vibration
Weight: 0.4 kg



**S-093-95**
Maxi metal tray
1100 x 420 mm

**S-097-95**
Micro metal tray
850 x 390 mm

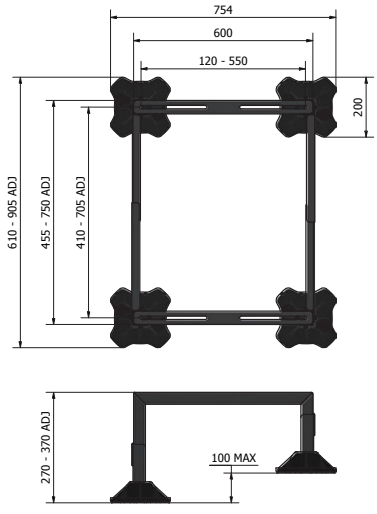


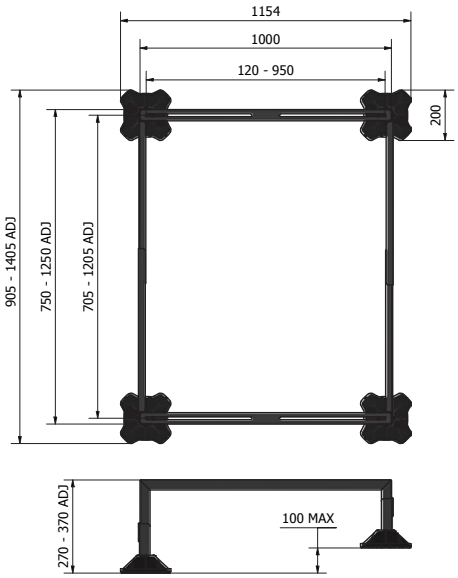


Information correct at time of going to press. Not all products are available in all regions.



# Mini Frame & Extension Kit

For supporting small condensing units and heat pumps. Ideal for ground mounting or wind protected environments.

BIG FOOT® SYSTEMS

## KEY FEATURES ↓

- ✓ Suitable for most mini splits & heat pumps
- ✓ Easy adjustment to suit any requirement
- ✓ Complete boxed kit of required components
- ✓ Install multiple units with extension kit

## KIT INCLUDES ↓

| Components | Frame | Ext. |
|---|---|---|
| 200mm foot & mat | × 4 | × 2 |
| 900mm End bar | × 2 | × 1 |
| 700mm Cross bar | × 2 | – |
| 570mm Cross bar | – | × 2 |
| Unit fixing kit | × 1 | × 1 |

| Description | Product Code | Box Length | | Box Width | | Box Height | | Box Weight | | Max. Load | |
|---|---|---|---|---|---|---|---|---|---|---|---|
| | | (mm) | (in) | (mm) | (in) | (mm) | (in) | (Kg) | (lbs) | (Kg) | (lbs) |
| Mini Frame | BN8100 | 970 | 38 1/5 | 220 | 8 2/3 | 110 | 4 1/3 | 13 | 29 | 200 | 441 |
| Mini Extension Kit | BN8101 | 970 | 38 1/5 | 220 | 8 2/3 | 110 | 4 1/3 | 8 | 18 | 200 | 441 |

**Mini Frame** BN8100 & **Extension Kit** BN8101

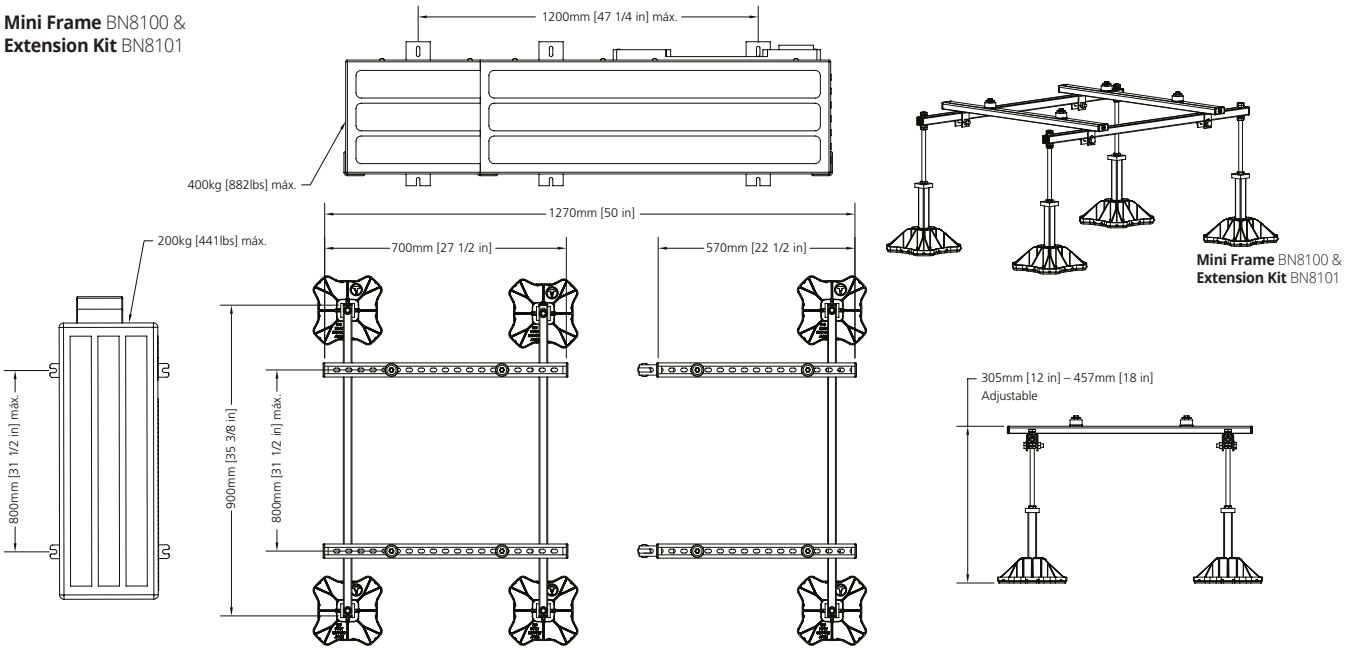




**Mini Frame** BN8100 & **Extension Kit** BN8101

Information correct at time of going to press. Not all products are available in all regions.



NEW & IMPROVED

THE FRAME THAT EXTENDS IN ANY DIRECTION

# Multi Frame Wide & Extension Kit

Multi Frame Wide is 1.2m long and 1.5m wide, providing superb frame stability and prevents overturning in higher wind applications.

BIG FOOT® SYSTEMS

## KEY FEATURES ↓

- ✓ Suitable for larger units up to 1.5m width/depth
- ✓ Easy adjustment to suit any requirement
- ✓ Complete boxed kit of required components
- ✓ Install units back to back

## KIT INCLUDES ↓

| Multi Frame | Frame | Ext. |
|---|---|---|
| 305mm foot & mat | × 4 | × 2 |
| 1.2m End bar | × 2 | × 2 |
| 1.5m Cross bar | × 3 | × 3 |
| Unit clamp kit (4 pack) | × 2 | × 2 |
| Connector | - | × 4 |

| Part | Description | Product Code | Box Length | | Box Width | | Box Height | | Box Weight | | Max. Load | |
|---|---|---|---|---|---|---|---|---|---|---|---|---|
| | | | (mm) | (in) | (mm) | (in) | (mm) | (in) | (Kg) | (lbs) | (Kg) | (lbs) |
| 1 | Multi Frame Wide | BN6900 | 1600 | 62 7/8 | 350 | 13 7/8 | 150 | 6 | 52 | 115 | 500 | 1102 |
| 2 | Wide Extension Kit | BN6901 | 1600 | 62 7/8 | 350 | 13 7/8 | 150 | 6 | 41 | 93 | 500 | 1102 |

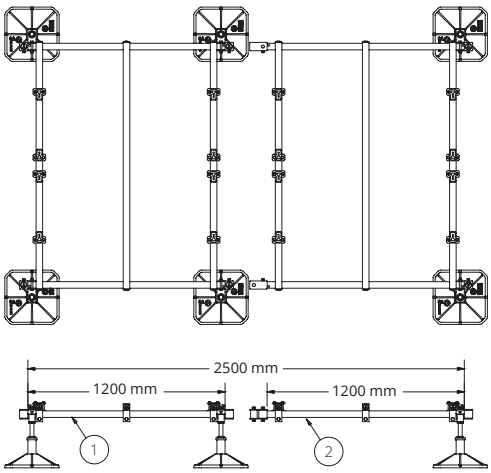




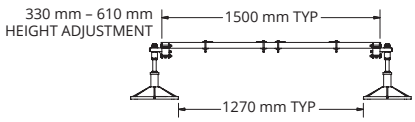


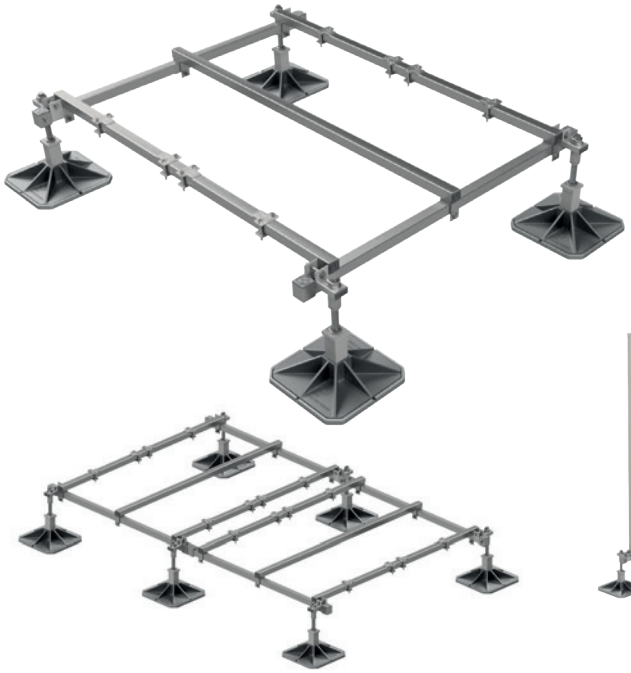

**EASY TO ASSEMBLE**
Cross bars simply place onto the end bars rather than sliding onto.



Information correct at time of going to press. Not all products are available in all regions.




# Multi Frame & Multi Frame XL

Multi Frame and Multi Frame XL can be extended in any direction using the Extension kits, providing the flexibility to mix and match Multi Frame and Multi Frame XL to create the frame size and shape configuration to suit the install.

BIG FOOT® SYSTEMS

## KEY FEATURES ↓

- ✓ 305mm Feet.
- ✓ 1m x 1.2m, 1.5m x 1.2m multiples.
- ✓ Mix and match any Multi Frame and Multi Frame XL of the same height.
- ✓ Extend from any side.
- ✓ Suits a wide variety of units.
- ✓ Adjustable leg assemblies.
- ✓ Easy to assemble - cross bars simply position onto the end bars.
- ✓ Supplied boxed with clamp kits.





## KIT INCLUDES ↓

| Multi Frame | FRAME | EXT.. |
|---|---|---|
| 305mm foot & adhered mat | × 4 | × 2 |
| 1m End bar | × 2 | × 2 |
| 1.2m Cross bar | × 2 | × 2 |
| Unit clamp kit (4 pack) | × 2 | × 2 |
| Connector | – | × 2 |
| **Multi Frame XL** | **FRAME** | **EXT..** |
| 305mm foot & adhered mat | × 4 | × 2 |
| 1.5m End bar | × 2 | × 2 |
| 1.2m Cross bar | × 3 | × 3 |
| Unit clamp kit (4 pack) | × 2 | × 2 |
| Connector | – | × 2 |

| Description | Product Code | Length (mm) | Width (mm) | Height (mm) | Weight (Kg) | Max. Load (Kg) |
|---|---|---|---|---|---|---|
| Multi Frame | **BN9720** | 1000 | 1200 | 335 - 440 | 36 | 500 |
| Extension Kit | **BN9721** | 1000 | 1200 | 335 - 440 | 26 | 500 |
| Multi Frame 560 mm | **B9720/1** | 1000 | 1200 | 335 -660 | 40 | 500 |
| Extension Kit 560 mm | **B9721/1** | 1000 | 1200 | 335 -660 | 28 | 500 |
| Multi Frame XL | **BN9731** | 1500 | 1200 | 335 - 440 | 43 | 500 |
| Extension Kit XL | **BN9732** | 1500 | 1200 | 335 - 440 | 33 | 500 |
| Multi Frame XL 560 mm | **B9731/1** | 1500 | 1200 | 335 -660 | 45 | 500 |
| Extension Kit XL 560 mm | **B9732/1** | 1500 | 1200 | 335 -660 | 35 | 500 |

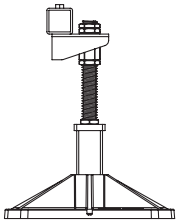

Standard Leg Assembly
Height adjustment:
335 - 440mm

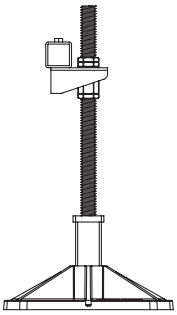

Long Stud Leg Assembly
Height adjustment:
335 - 660mm

Information correct at time of going to press. Not all products are available in all regions.



RAL 9002
COLOUR

CERTIFIED 160 KG

# SPLIT BRACKETS

## STANDARD

SUPPLIED PRE-ASSEMBLED WITH DOUBLE M8 SCREWS FOR AN EASY INSTALLATION. HIGH RESISTANCE POWDER COATING.

| Part No. | RAL | Dimensions WxHxL mm | Max. Load |
|---|---|---|---|
| S-491P | 9002 | 450x400x800 | 160 kg |
| S-462P | 9002 | 520x400x800 | 160 kg |
| S-463P | 9002 | 560x400x800 | 160 kg |
| S-464P | 9002 | 600x400x800 | 160 kg |



GRINTA
slider for split bracket



Double M8 8.8
pre-assembled screws

P = Pre-assembled

2EMMECLIMA

Information correct at time of going to press. Not all products are available in all regions.





M8 8.8


RAL 9005

# CLOCK TYPE 2

ADJUSTABLE UNIVERSAL PRE-ASSEMBLED AND NON WALL BRACKETS WITH HOOK SYSTEM.

| Part No. | RAL | Dimensions WxHxL mm | Max. Load |
|---|---|---|---|
| **S-211P** | 9002 | 465x400x800 | 160 kg |
| **S-213P** | 9002 | 550x400x800 | 160 kg |
| **S-211P.95** | 9005 | 465x400x800 | 160 kg |
| **S-213P.95** | 9005 | 550x400x800 | 160 kg |

P = Pre-assembled

# CLOCK TYPE 3

ADJUSTABLE UNIVERSAL PRE-ASSEMBLED AND NON WALL BRACKETS WITH HOOK SYSTEM.





S-374-1P / S-313P


S-311P / S-310P

| Part No. | RAL | Dimensions WxHxL mm | Max. Load |
|---|---|---|---|
| **S-310P** | 9002 | 420x400x800 | 120 kg |
| **S-311P** | 9002 | 465x400x800 | 160 kg |
| **S-313P** | 9002 | 550x400x800 | 160 kg |
| **S-374-1P** | 9002 | 600x400x1000 | 160 kg |

P = Pre-assembled

2EMMECLIMA

Information correct at time of going to press. Not all products are available in all regions.

# HEAVY DUTY SPECIAL

RAL 9002
COLOUR

CERTIFIED 300-550 KG



SUPER LOAD KIT*




**INDUSTRIAL BRACKETS SUPPLIED WITH ADJUSTABLE EXTENSION PIECES AND/OR SUPER LOAD KITS.**

| Part No. | Dimensions WxHxL mm | Max. Load |
|---|---|---|
| S-680-1 SUPER LONG | min 600x400x960 / max 640x400x960 | 300 kg |
| S-685-1 SUPER LOAD | min 600x400x960 / max 640x400x960 | 550 kg |
| S-683-1 SUPER LONG | min 600x400x960 / max 640x400x960 mm with 3 verticals | 300 kg |

SUPER LOAD KIT available separately

| Part No. | Dimensions |
|---|---|
| S-800* | P100xH280xL130 mm |

2EMMECLIMA

Information correct at time of going to press. Not all products are available in all regions.

# POLYAMIDE BRACKET RANGE

The choice of material comes from its particular characteristics: with sudden changes in temperature and humidity, polyamide regenerates instead of deteriorating, thus increasing its efficiency and keeping the load capacity of the bracket unchanged.

- Resistance, lightness and easyness in use;
- High mechanical performances;
- Excellent resistance to aging, corrosion, rust and atmospheric agents like UV-rays and saltiness;
- Can be used in areas with temperatures ranging from -20°C to +50°C.

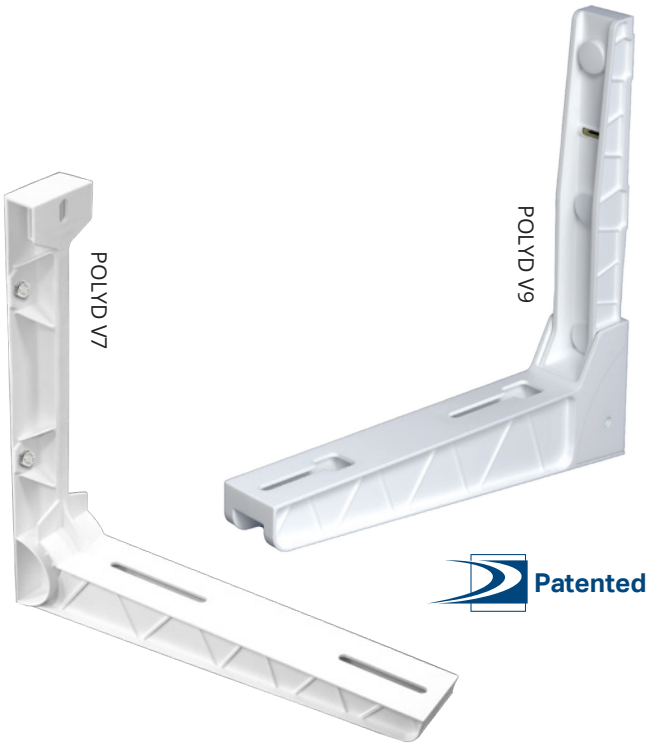


## POLYD V7

Fixed polyamide bracket

| Part No. | AxB | Certified Load Capacity | | Max. Load |
|---|---|---|---|---|
| 9794-511-08 | 450 x 450 | 110 Kg | | 330 Kg |
| 9794-512-08 | 520 x 450 | 90 Kg | | 270 Kg |

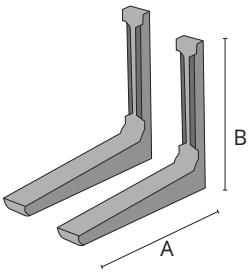


## POLYD V9

Foldable and pre-assembled polyamide bracket

| Part No. | AxB | Certified Load Capacity | | Max. Load |
|---|---|---|---|---|
| 9794-515-08 | 450 x 450 | 110 Kg | | 330 Kg |
| 9794-516-08 | 520 x 450 | 90 Kg | | 270 Kg |

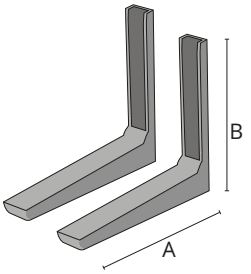




Information correct at time of going to press. Not all products are available in all regions.



# ROOF BRACKET

ADJUSTABLE BRACKET FOR ROOF INSTALLATION

Adjustable inclination from 15° up to 30° according to the roof slope.

| Part No. | Dimensions LxH mm |
|---|---|
| S-661 | 850x520 mm |

2EMMECLIMA

Information correct at time of going to press. Not all products are available in all regions.

# VIBRATION DAMPERS

TACCO COLOURSRANGE

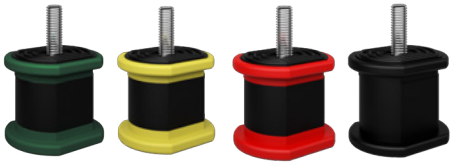

The vibration damper is produced with different hardnesses (shore) identified by the color, in order to cover the widest range of applications. It resists atmospheric aging, UV rays and temperatures from -50°C to + 120°C. Distributed in kit of 4 pieces with screws for installation on bracket and/or on the ground.

| Colour | For Condensers Up To | Part No. | | Shore |
|---|---|---|---|---|
| | | Blister | Box | |
| GREEN | 100 KG | 9898-037 | 9898-037B | 35 |
| YELLOW | 200 KG | 9898-038 | 9898-038B | 45 |
| RED | 350 kg | 9898-039 | 9898-039B | 60 |
| BLACK | 450 KG | 9898-040 | 9898-040B | 70 |

## DISPLAY STAND

The display can be assembled with different combinations of products. Available in metal for blister packs and cardboard for boxes.







DISPLAY STAND

Part No.

EXPO20

VECAMCO

Information correct at time of going to press. Not all products are available in all regions.

# VIBRATION DAMPERS

SUSTA COLOURSRANGE

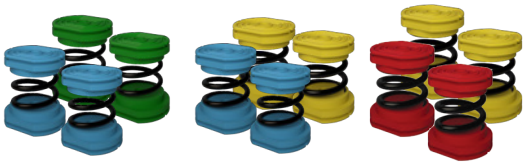

The vibration damper is made with different sections of the spring, corresponding to different hardnesses, in order to cover the widest range of applications. It is resistant to weathering, UV rays, and temperatures from -50°C to +120°C. Distributed in kit of 4 pieces in 2 colours to distinguish the different load capacity with screws for installation on bracket and/or on the ground.

| Colour | For Condensers Up To | Part No. | |
|---|---|---|---|
| | | Blister | Box |
| BLUE & GREEN | 55 KG | 9898-134 | 9898-134B |
| BLUE & YELLOW | 80 KG | 9898-135 | 9898-135B |
| YELLOW & RED | 120 KG | 9898-136 | 9898-136B |




Display Stand Part No.

EXPO20

SUSTA+ COLOURSRANGE



The anti-vibration mount is made with different sections of spring, corresponding to different hardnesses, in order to cover the widest range of applications. Even more resistant thanks to the reinforced thermoplastic cover. Resistant to atmospheric ageing, UV rays and temperatures from -50°C to +120°C. Distributed in kits of 4 pieces in 2 colours to differentiate the different load capacities, with screws for mounting on brackets and/or on the ground.

| Colour | For Condensers Up To | Part No. | |
|---|---|---|---|
| | | Blister | Box |
| BLUE & GREEN | 55 KG | 9898-034 | 9898-034B |
| BLUE & YELLOW | 80 KG | 9898-035 | 9898-035B |
| YELLOW & RED | 120 KG | 9898-036 | 9898-036B |




Display Stand Part No.

EXPO20

VECAMCO

Information correct at time of going to press. Not all products are available in all regions.

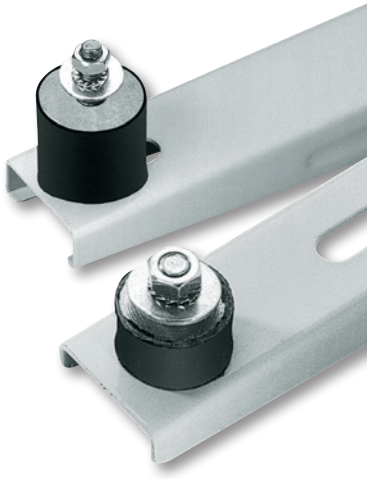

# ANTI-VIBRATION DAMPERS

Made of vulcanised natural rubber with threaded metal inserts, they isolate and, in many cases, completely eliminate vibrations produced by machines. Supplied in packs of 4 vibration dampers, complete with nuts and washers.

| | Part No. | Dimensions | | |
|---|---|---|---|---|
|  9899-023 9899-023 9899-024 9899-024 | 9898-023 | 35x25 | 50 Kg | 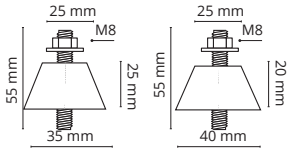  |
| | 9898-024 | 40x20 | 50 Kg | |
|  | 9898-019 | 40x25 | 80 Kg | 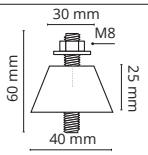  |
|  | 9898-028 | 30x20 | 50 Kg | 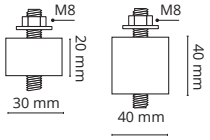  |
| | 9898-027 | 40x40 | 100 Kg | |
|  | 9898-025 | 48x20 | 80 Kg | 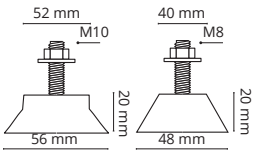  |
| | 9898-022 | 56x20 | 150 Kg | |
| | 9898-018 | 56x20 | 250 Kg | |
|  | 9898-026 | 40x40 | 80 Kg | 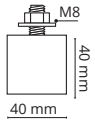  |

VECAMCO

Information correct at time of going to press. Not all products are available in all regions.

# AV Pads

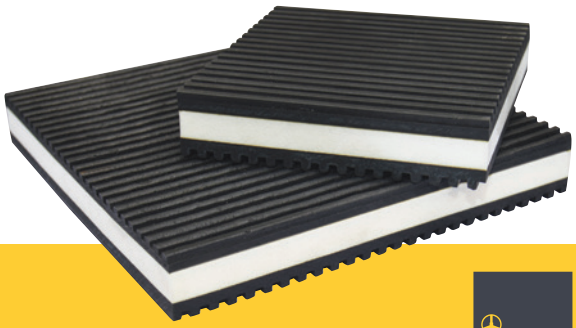

AV Pads come in a range of sizes and offer isolation against vibration between the unit and the Big Foot Frame.

## KEY FEATURES ↓

- ✓ Anti-vibration core.
- ✓ Outer layer corrugated anti-slip rubber.
- ✓ Available in 6 sizes.

| Description | Product Code | Length (mm) | Width (mm) | Height (mm) |
|---|---|---|---|---|
| 51 mm | B6909 | 51 | 51 | 22.2 |
| 76 mm | B6910 | 76 | 76 | 22.2 |
| 101 mm | B6911 | 101 | 101 | 22.2 |
| 152 mm | B6912 | 152 | 152 | 22.2 |
| 305 mm | B6913 | 305 | 305 | 22.2 |
| 457 mm | B6914 | 457 | 457 | 22.2 |

# Vibromats

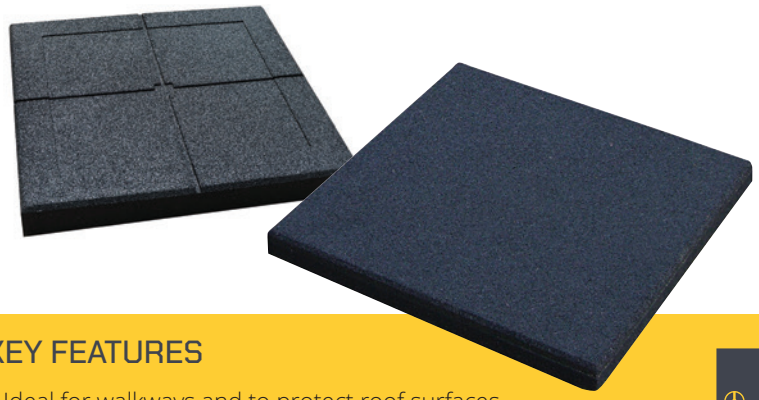

A range of durable rubber mats that can lay directly on the rooftop to protect it from potential damage from foot fall and ancillary equipment.

## KEY FEATURES

- ✓ Ideal for walkways and to protect roof surfaces.
- ✓ Durable recycled rubber reduces vibration.
- ✓ 5 options available*.

| Description | Product Code | Length (mm) | Width (mm) | Height (mm) |
|---|---|---|---|---|
| Small Strip* | B6491/1 | 600 | 150 | 30 |
| Large Strip* | B6282/1 | 1000 | 500 | 30 |
| Plain Tile 400 | B9641 | 400 | 400 | 45 |
| Plain Tile 500 | B6416 | 500 | 500 | 45 |
| 400 with screws | 167BB00662V | 400 | 400 | 45 |
| Plain Strip | B6024 | 1000 | 75 | 15 |

*NOTE: Small Strip and Large Strip include 2 no. steel plate core at either end.

Information correct at time of going to press. Not all products are available in all regions.

# Drip Trays

## METAL

Condensate collection tray complete with hooks, equipped with a hole and Ø 20 mm drain for condensate drainage. Adaptable to any type of metal bracket and floor support.

| Part No. | Dimensions WxD mm |
|---|---|
| S-097-71 | 850 x 390 |
| S-095-71 | 940 x 390 |
| S-096-71 | 940 x 420 |
| S-093-71 | 1100 x 420 |
| S-092-71 | 1400 x 420 |

2EMMECLIMA

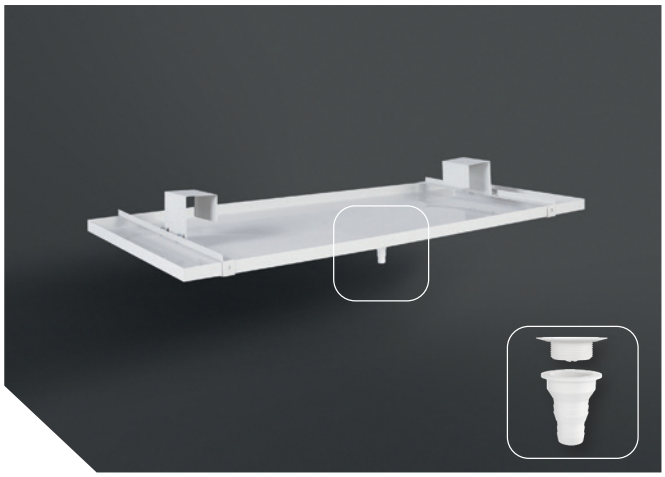

Drain Ø 20/25 mm
Code: 18580.01 available for sale

## PLASTIC

### Simple Plastic Condensate Collection Tray for Outdoor Units

Adaptable to all types of brackets on the market

| Part No. | Dimensions WxDxH mm |
|---|---|
| 9899-098-01 | 790 x 390 x 30 |
| 9899-099-01 | 945 x 425 x 40 |

VECAMCO

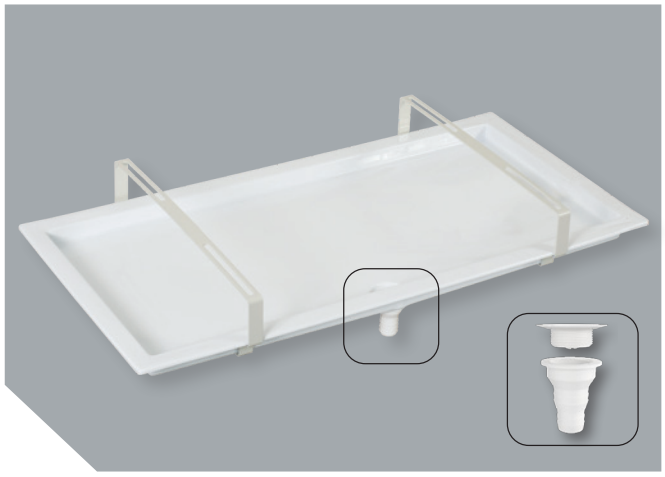

Drain Ø 20/25 mm
Code: 18580.01 available for sale

Information correct at time of going to press. Not all products are available in all regions.

# CONDENSATE WASTE

## WITH Ø 19/29/32 MM CONNECTION

Adaptable to the main external units on the market, with elastic press-fit closure. Supplied with 2 caps.







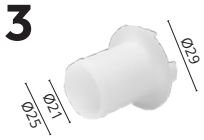


| | Part No. | Size |
|---|---|---|
| 1 | 9899-109 | Ø 19 |
| 2 | 9899-108 | Ø 32 |
| 3 | 9899-110 | Ø 29 |

## CONDENSATE WASTE







| | Part No. | OD | ID | Qty |
|---|---|---|---|---|
| 1 | 18580.01 | Ø25 / Ø20 | Ø 16 | 10 |
| 2 | 18581.01 | Ø25 / Ø20 | Ø 16 | 10 |

VECAMCO

Information correct at time of going to press. Not all products are available in all regions.

Vinyl Tubes 136
Rigid Pipe 137
Flexible Tubes 138
Drainage Fittings & Spares 139
Pipelounge 140-141
Connectors 142-143
Pipe Support Clips 144-150
Tape 151
Drain Cleaner & Unblocker 152


# 08 CONDENSATE MANAGEMENT & DRAINAGE



ASPEN PUMPS GROUP



# Vinyl Tubing

Flexible, durable and non toxic – we have the most extensive range on the market.

| REINFORCED BRAIDED VINYL TUBE | | | | | | | | |
|---|---|---|---|---|---|---|---|---|
| Description | Part No. | Diameter (mm) | | Colour | Length (m) | Pressure (bar) @20°C | Burst Pressure (bar) @20°C | Temp. Range |
| | | ID | OD | | | | | |
| 1/4" (6mm) | AX5100 | 6 | 12 | Clear | 30 | 8 | 24 | -5°C – 60°C |
| 3/8" (10mm) | AX5101 | 10 | 14 | | | 7 | 21 | |
| 1/2" (12mm) | AX5102 | 12 | 16 | | | 6 | 18 | |
| 5/8" (15mm) | AX5103 | 15 | 20 | | | 6 | 18 | |
| 6/12 mm | AX5120 | 6 | 12 | Clear | 25 | 14 | 42 | |
| 10/16 mm | AX5121 | 10 | 16 | | | 9 | 27 | |
| 16/22 mm | AX5122 | 16 | 22 | | | 6 | 18 | |
| 19/26 mm | AX5123 | 19 | 26 | | | 6 | 18 | |
| 25/33 mm | AX5124 | 25 | 33 | | | 5 | 15 | |
| 1/4" (6mm) | AX5110 | 6 | 12 | Black | 30 | 8 | 24 | |
| 3/8" (10mm) | AX5111 | 10 | 14 | | | 7 | 21 | |
| 1/2" (12mm) | AX5112 | 12 | 16 | | | 6 | 18 | |
| 5/8" (15mm) | AX5113 | 15 | 20 | | | 6 | 18 | |

| VINYL TUBE | | | | | | | | |
|---|---|---|---|---|---|---|---|---|
| Description | Part No. | Diameter (mm) | | Colour | Length (m) | Pressure (bar) @20°C | Burst Pressure (bar) @20°C | Temp. Range |
| | | ID | OD | | | | | |
| 1/4" (6mm) | AX5200 | 6 | 10 | Clear | 30 | 6 | 18 | -5°C – 60°C |
| 3/8" (10mm) | AX5201 | 10 | 14 | | 30 | 5 | 15 | |
| 1/2" (12mm) | AX5202 | 12 | 16 | | 30 | 5 | 15 | |
| 1/4" (6mm) | AX5203 | 6 | 12 | | 10 | 5 | 15 | |
| 4/7 mm | AX5210 | 4 | 7 | | 50 | 4 | 12 | |
| 6/9mm | AX5211/1 | 6 | 9 | | 50 | 5 | 15 | |
| 6/9 mm | AX5211/F | 6 | 9 | Blue | 50 | 5 | 15 | |
| 9/12 mm | AX5212 | 9 | 12 | Clear | 50 | 4 | 12 | |
| 10/14 mm | AX5213 | 10 | 14 | | | 5 | 15 | |
| 15/19 mm | AX5214 | 15 | 19 | | | 4 | 12 | |

| CLEAR HOSE | | | | |
|---|---|---|---|---|
| Part No. | Diameter (mm) | | Colour | Length (m) |
| | ID | OD | | |
| 9899-049-00 | 9 | 6 | Clear | 25 |
| 9899-076-00 | 14 | 10 | | 25 |



VECAMCO

# RIGID CONDENSATE DRAIN PIPE

Patented

Made of white (RAL 9010), shockproof, fireproof PVC stabilized against UV rays. Suitable for installation along as well as under wall. Hose and joints can easily be fitted by pre-mounted gaskets on the joints.

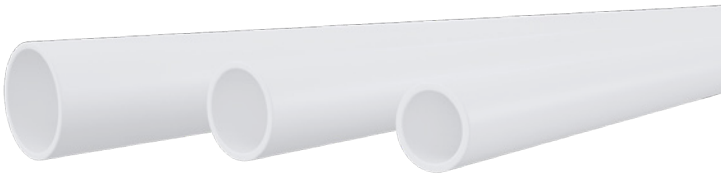


| Part No. | Ø | |
|---|---|---|
| 9899-040-08 | 0.9” | Ø 20 mm |
| 9899-110-08 | 1” | Ø 25 mm |
| 9899-120-08 | 1.2” | Ø 32 mm |

## PVC CONNECTORS FOR RIGID DRAIN PIPE

Sealing gasket to improve the grip on the rigid drain pipe.

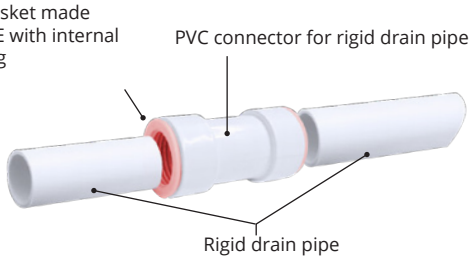




| | Part No. | Ø | |
|---|---|---|---|
| FF SLEEVE | 9899-041-08 | 0.9” | Ø 20 mm |
| | 9899-111-08 | 1” | Ø 25 mm |
| | 9899-121-08 | 1.2” | Ø 32 mm |
| 90° BEND | 9899-042-08 | 0.9” | Ø 20 mm |
| | 9899-112-08 | 1” | Ø 25 mm |
| | 9899-122-08 | 1.2” | Ø 32 mm |
| 45° BEND | 9899-043-08 | 0.9” | Ø 20 mm |
| | 9899-113-08 | 1” | Ø 25 mm |
| | 9899-123-08 | 1.2” | Ø 32 mm |

## PVC GLUE

| Part No. |
|---|
| 9899-047-08 |





| | Part No. | Ø | |
|---|---|---|---|
| T-JOINT | 9899-044-08 | 0.9” | Ø 20 mm |
| | 9899-114-08 | 1” | Ø 25 mm |
| | 9899-124-08 | 1.2” | Ø 32 mm |
| Ø25/20 MM PIPE REDUCER | 9899-117-08 | 1”-0.8” | Ø 25-20 mm |
| | 9899-127-08 | 1.2”-1” | Ø 32-25 mm |
| CONNECTING SLEEVE<br>Connecting sleeve from flexible hose to rigid drain pipe. | 9899-046-08 | 0.8”-0.8” | Ø 20-20 mm |
| | 9899-116-08 | 0.8”-1” | Ø 20-25 mm |
| HOSE FIXING CLIP | 9899-045-08 | 0.9” | Ø 20 mm |
| | 9899-115-08 | 1” | Ø 25 mm |
| | 9899-125-08 | 1.2” | Ø 32 mm |

VECAMCO

Information correct at time of going to press. Not all products are available in all regions.

# COILED HOSE

| Description | Part No. | Colour | Diameter (mm) ID | Diameter (mm) OD | Length (m) | Pressure (bar) | Burst Pressure (bar) | Temp. Range |
|---|---|---|---|---|---|---|---|---|
| Flexible coextruded hose | 9899-053-01 | White | 16 | 18 | 50 | n/a | n/a | |
| | 9899-052-01 | | 18 | 20 | | | | |
| Flexible Hose | 9899-051-01 | | 16 | 18 | 50 | n/a | n/a | |
| | 9899-050-01 | | 18 | 20 | | | | |
| Flexible coextruded hose with M/F fitting | 9899-054-01 | Grey | 6/18 and 18/20 mm | | 50 | n/a | n/a | |
| Coiled hose | 9899-059-01 | White | – | 14 | 30 | n/a | n/a | n/a |
| | 9899-055-01 | | | 20 | | | | |
| | 9899-137-01 | | | 16 | | | | |
| | 9899-056-01 | | | 18 | | | | |
| | 9899-057-01 | | | 16 | | | | |
| | 9899-058-01 | | | 25 | | | | |
| | 9899-068-01 | | | 32 | | | | |



# CONNECTORS FOR COILED HOSES

For multi-split installations, they convey the condensate outflow of two different units to one single pipeline. Suitable for coiled hoses only.

| Part No. | Ø AxB |
|---|---|
| 9899-142-01 | Ø 16/16 mm |
| 9899-162-01 | Ø 20/20 mm |
| 9899-141-01 | Ø 16/16 mm |
| 9899-140-01 | Ø 20/16 mm |
| 9899-161-01 | Ø 20/20 mm |

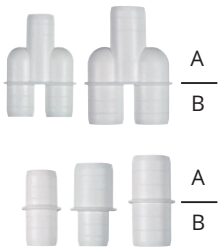


Patented

VECAMCO

Information correct at time of going to press. Not all products are available in all regions.

# THREE-WAY CONNECTORS FOR FLEXIBILE HOSE

For multi-split installations, they connect the condensate outflow of two condensing units to one single pipeline. Suitable for flexible hoses only, supplied with gaskets.

| | Part No. | Ø | |
|---|---|---|---|
| 1 | 9899-062-01 | Ø 0.6”/0.7” | Ø 16/18 mm |
| | 9899-060-01 | Ø 0.7”/0.8” | Ø 18/20 mm |
| 2 | 9899-066-01 | Ø 0.6”/0.7” | Ø 16/18 mm |
| | 9899-064-01 | Ø 0.7”/0.8” | Ø 18/20 mm |
| 3 | 9899-067-01 | Ø 0.6”/0.7” | Ø 16/18 mm |
| | 9899-065-01 | Ø 0.7”/0.8” | Ø 18/20 mm |



Patented

# ADAPTER CONNECTIONS

Joints designed to connect rigid pipe to flexible drain hose. They are suitable for joining the outlet pipes of the evaporator to the pipe or hose of a different size. They allow easy connection to pipes Ø 14-16-18-20.

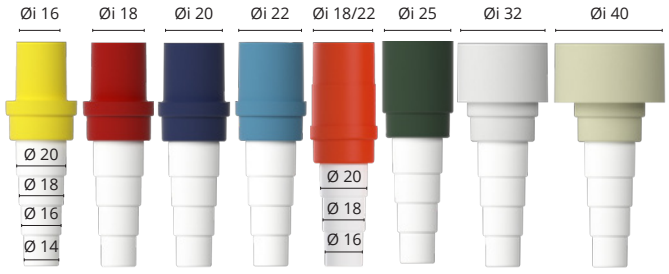


| Part No. | ID | | OD | |
|---|---|---|---|---|
| **9899-143-01** | Ø 0.6” | Ø 16mm | Ø 0.76” | Ø 19.4mm |
| **9899-144-01** | Ø 0.7” | Ø 18mm | Ø 0.84” | Ø 21.4mm |
| **9899-145-01** | Ø 0.8” | Ø 20mm | Ø 0.92” | Ø 23.4mm |
| **9899-149-01** | Ø 0.9” | Ø 22mm | Ø 1” | Ø 25.4mm |
| **9899-138-01** | Ø 0.7”-0.9” | Ø 18/22mm | Ø 0.84”/1” | Ø 21.4/25.4mm |
| **9899-146-01** | Ø 1” | Ø 25mm | Ø 1.12” | Ø 28.4mm |
| **9899-147-01** | Ø 1.2” | Ø 32mm | Ø 1.39” | Ø 35.4mm |
| **9899-148-01** | Ø 1.5” | Ø 40mm | Ø 1.71” | Ø 43.4mm |

VECAMCO

Information correct at time of going to press. Not all products are available in all regions.


PIPE LOUNGE
NEW & INSTORE TODAY!
THE FASTEST WAY TO SUPPORT YOUR PIPEWORK!
The multi-pipe solution that simplifies your entire install.
THE PIPELOUNGE STORY
gb.pipelounge.com




# Multi Pipe Support

Pipelounge pipe support systems keep pipe runs neatly organised, resulting in a professional, tidy finish on every install. Allowing expansion and contraction of multiple insulated pipes. This not only protects the pipework but also saves installers significant time and money by simplifying the installation process. **Faster. Neater. Smarter.**



PIPE LOUNGE

Channel

Rod

Surface

- UL 94 Classification – V0
- Versatile: Connect horizontally for wider spans or stack vertically in tight spaces.
- Economical & Robust: Ensures a high-quality installation for both new builds and retrofits.
- Fits M10 threaded rod.
- Pipelounge supports are rated for 50kg loads. For loads over 50kg a standard metal strut section must be used.

| SPECIFICATIONS | |
|---|---|
| Material | PC ABS plastic |
| Max. Load | 50kg (without metal support) |
| Sustainability | 100% recyclable |
| Material | Fire retardant V-0 rated plastic |

**Scan here for full range:**

Please note, these products are sold in box quantities only.

| OPTIONS | | |
|---|---|---|
| Part No. | Description | Box Qty |
| PLmini | Pipelounge Pipe Support 113 x 250mm Box | 40 |
| PL150 | Pipelounge Pipe Support 150 x 250mm Box | 30 |
| PL200 | Pipelounge Pipe Support 200 x 250mm Box | 20 |
| PL300 | Pipelounge Pipe Support 300 x 250mm Box | 20 |
| PL400 | Pipelounge Pipe Support 400 x 250mm Box | 10 |
| PL500 | Pipelounge Pipe Support 500 x 250mm Box | 10 |
| PL600 | Pipelounge Pipe Support 600 x 250mm Box | 10 |
| PLjoiner | Pipelounge Joiner Clips Box | 20 |
| PLpacker | Pipelounge Packers Box | 20 |
| PLsticker | Pipelounge Refrigeration Stickers Box | 100 |

Information correct at time of going to press. Not all products are available in all regions.



# Tube & Connector Fittings

## Adaptors / Straight Connectors

| SIZING OPTIONS | | | |
|---|---|---|---|
| Size | Ideal Use | Part No. | Pack Qty |
| 6 mm – 10 mm | Reduction of 6 mm (1/4") on 10 mm (3/8") | FP2020 | 5 |
| 6 mm, 10 mm, to 12 mm to 16 mm | 1/4 " to 3/8 " to 5/8 " to 1/2 " for peristaltic pumps | FP2632 | 5 |



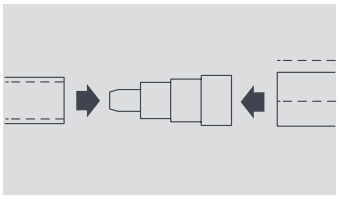

## Non-return Valves

| SIZING OPTIONS | | | |
|---|---|---|---|
| Size | Ideal Use | Part No. | Pack Qty |
| 6 mm (1/4 ") | Prevents backflow of water | FP2628 | 5 |
| 10 mm (3/8 ") | Prevents backflow of water | FP2630 | 5 |



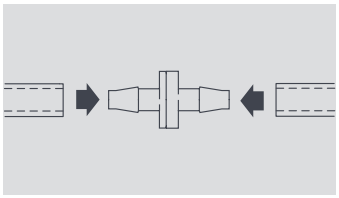

## Hose to Hose

| SIZING OPTIONS | | | |
|---|---|---|---|
| Size | Ideal Use | Part No. | Pack Qty |
| 6 mm (1/4 ") | Equal "T" Connector | FP2024 | 5 |
| 6 mm (1/4 ") | Elbow Connector | FP2028 | 5 |
| 6 mm (1/4 ") | Straight Connector | FP2622 | 5 |
| 10 mm (3/8 ") | Equal "T" Connector | FP2030 | 5 |
| 10 mm (3/8 ") | Elbow Connector | FP2032 | 5 |
| 10 mm (3/8 ") | Straight Connector | FP2624 | 5 |
| 19/16 mm | Blue straight connector | 209DV00012 | 50 |
| 16 mm | Blue Y Connector | 209DV00017 | 10 |
| 16 mm | Blue Equal "T" Connector | 209DV00018 | 10 |
| 16 mm | Blue Elbow Connector | 209DV00019 | 10 |
| 16 mm | Blue Straight Connector | 209DV00020 | 10 |



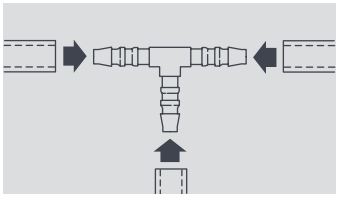

## Hose to Overflow or Waste / Soil Pipe

| SIZING OPTIONS | | | |
|---|---|---|---|
| Size | Ideal Use | Part No. | Pack Qty |
| 6 mm (1/4 ") to 10 mm (3/8 ") – overflow pipe 21 mm | Hose to Overflow | FP2040 | 3 |
| 6 mm (1/4 ") to 10 mm (3/8 ") – self sealing adaptor | Hose to Waste / Soil Pipe (Drill hole to 11.5mm diameter) | FP2038 | 3 |



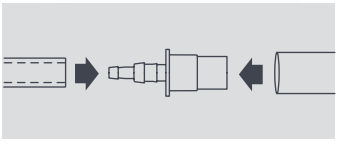



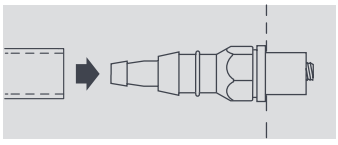

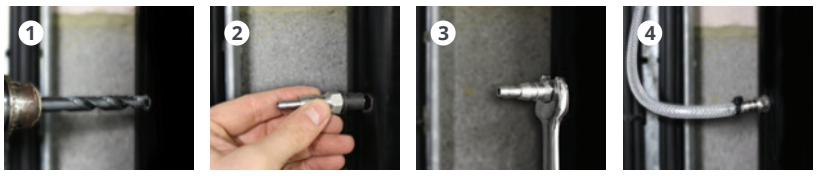


Note: All connectors should be fitted with the relevant cable ties



# Rubber Connectors

## Mini Pump

### RUBBER ADAPTOR TO CONNECT A DUCTED UNIT TO A MINI PUMP

| OPTIONS | | | | |
|---|---|---|---|---|
| Ducted AC outlet OD | Reservoir Pump OD | Ideal Use | Part No. | Pack Qty |
| 20 mm | 16 mm | Mitsu Heavy | FP2001 | 3 |
| 25 mm | 16 mm | Daikin, Mitsu Elec/Heavy, Panasonic, LG | FP2002 | 3 |
| 32 mm | 16 mm | Daikin, Mitsu Elec/Heavy, Panasonic, LG | FP2003 | 3 |



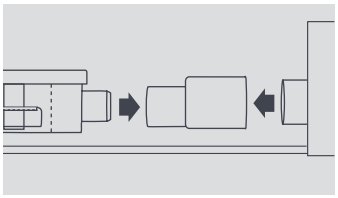

### 90˚ LONG ARM BEND TO CONNECT A WALL MOUNT TO MINI PUMP RESERVOIR

| OPTIONS | | | | |
|---|---|---|---|---|
| Drip tray outlet OD | Reservoir Pump OD | Ideal Use | Part No. | Pack Qty |
| 12 mm | 16 mm | LG wall mount and floor mount | FP2006 | 3 |
| 16 mm | 16 mm | Wall mount and floor mount | FP2056 | 3 |



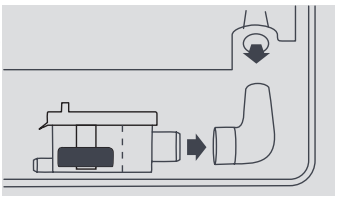

### OFFSET CONNECTOR

| OPTIONS | | | | |
|---|---|---|---|---|
| Drip tray outlet OD | Reservoir Pump OD | Ideal Use | Part No. | Pack Qty |
| 16 mm | 16 mm | Can be used universally | FP1024 | 5 |



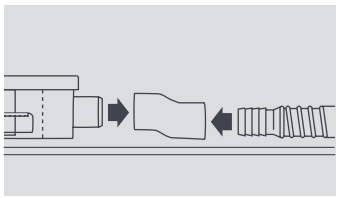

## Tank Pump

### RUBBER ADAPTOR TO CONNECT A CASSETTE UNIT CONDENSATE DRAIN PIPE TO A TANK PUMP

| OPTIONS | | | | |
|---|---|---|---|---|
| Cassette outlet OD | Overflow pipe OD | Ideal Use | Part No. | Pack Qty |
| 16 mm | 21 mm | Unités LG | FP2011 | 3 |
| 26 mm | 21 mm | Daikin, Panasonic | FP2012 | 3 |
| 32 mm | 21 mm | Daikin, Mitsu Elec/Heavy, Panasonic, LG | FP2013 | 3 |



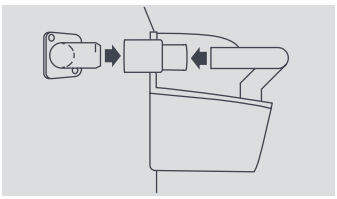

## Pipe to Pipe

### RUBBER ADAPTOR TO CONNECT 21MM OVERFLOW PIPE TO WASTE PIPE

| OPTIONS | | | | |
|---|---|---|---|---|
| Overflow pipe OD | Waste pipe OD | Ideal Use | Part No. | Pack Qty |
| 21 mm | 25 mm | Reducing or enlarging pipe diameters | FP2016 | 3 |
| 21 mm | 32 mm | Reducing or enlarging pipe diameters | FP2017 | 3 |
| 21 mm | 40 mm | Reducing or enlarging pipe diameters | FP2018 | 3 |



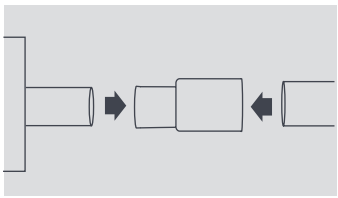

Note: All connectors should be fitted with the relevant cable ties

Information correct at time of going to press. Not all products are available in all regions.

# Metal Hanger



A rod clip ideal for supporting air conditioning line set pairs.

Channel

Rod

Surface

## Key Features

- Fits on both M8 and M10 studding
- Rapid 2 pipe installation
- Avoids the need for cable trays
- Zinc passivated to resist corrosion
- Ideal for when you need to meet fire regulations

| SPECIFICATIONS | |
|---|---|
| Materials of construction | Zinc passivated mild steel |
| Max. temp | 1000 °C |
| Max. rec. distance per clip | 1,2 m |

| SIZING OPTIONS | | | | |
|---|---|---|---|---|
| Description | Liquid* | Gas* | Part No. | Pack Qty |
| 2 | 10 mm (3/8 “) | 16 mm (5/8 “) | B6492/10 | 10 |
| 3 | 13 mm (1/2 “) | 22 mm (7/8 “) | B6493/10 | 10 |
| 4 | 16 mm (5/8 “) | 28 mm (1 1/8 “) | B6494/10 | 10 |

* Approximate pipe sizes (allowing for insulation)

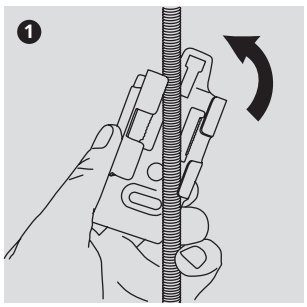


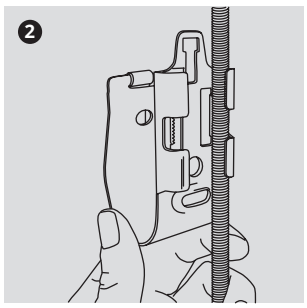


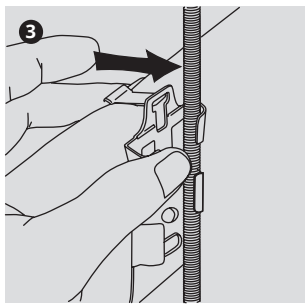


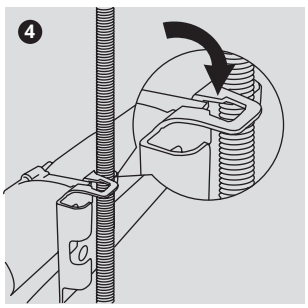


Information correct at time of going to press. Not all products are available in all regions.

# Stud Clip



Unique ratchet design ensures quick installation and adjustment.

Channel

Rod

Surface

## Key Features

- Available for M8 and M10 studding
- Fast fixing direct to studding
- Simple to install, adjust and relocate
- Fits metric and imperial pipe sizes

| SPECIFICATIONS | |
|---|---|
| Materials of construction | Nylon |
| Max. temp | 70 °C |
| Max. rec. distance per clip | 1,2 m |

| SIZING OPTIONS | | | | | M8 | |
|---|---|---|---|---|---|---|
| Size | Lagging 6 mm | 9 mm | 13 mm | 19 mm | Part No. | Pack Qty |
| 6 mm (1/4 “) | | | | | B6800/10 | 10 |
| 10 mm (3/8 “) | | | | | B6802/10 | 10 |
| 13 mm (1/2 “) | | | | | B6801/10 | 10 |
| 16 mm (5/8 “) | | | | | B6803/10 | 10 |
| 19 mm (3/4 “) | 6 mm (1/4 “) | | | | B6804/10 | 10 |
| 22 mm (7/8 “) | 10 mm (3/8 “) | | | | B6805/10 | 10 |
| 25 mm (1 “) | 13 mm (1/2 “) | 6 mm (1/4 “) | | | B6806/10 | 10 |
| 28 mm (1 1/8 “) | 16 mm (5/8 “) | 10 mm (3/8 “) | | | B6807/10 | 10 |
| 32 mm (1 1/4 “) | 19 mm (3/4 “)<br>22 mm (7/8 “) | 13 mm (1/2 “)<br>16 mm (5/8 “) | | | B6808/10 | 10 |
| 35 mm (1 3/8 “) | | 19 mm (3/4 “) | 10 mm (3/8 “)<br>13 mm (1/2 “) | | B6809/10 | 10 |
| 38 mm (1 1/2 “) | 28 mm (1 1/8 “) | 22 mm (7/8 “) | 16 mm (5/8 “) | | B6810/10 | 10 |
| 41 mm (1 5/8 “) | 35 mm (1 3/8 “) | 28 mm (1 1/8 “) | 19 mm (3/4 “)<br>22 mm (7/8 “) | 6 mm (1/4 “)<br>10 mm (3/8 “) | B6811/10 | 10 |
| 50 mm (2 “) | | | | 13 mm (1/2 “) | B6812/10 | 10 |
| 55 mm (2 1/8 “) | 41 mm (1 5/8 “) | 35 mm (1 3/8 “)<br>41 mm (1 5/8 “) | 28 mm (1 1/8 “)<br>35 mm (1 3/8 “) | 16 mm (5/8 “)<br>19 mm (3/4 “)<br>22 mm (7/8 “) | B6813/10 | 10 |

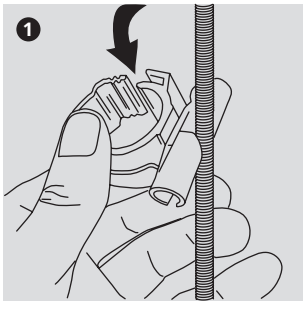


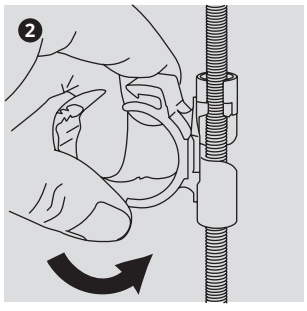


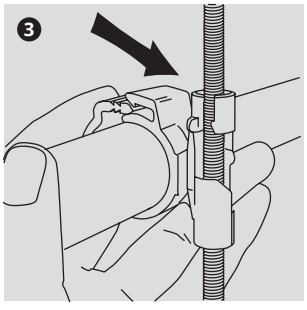


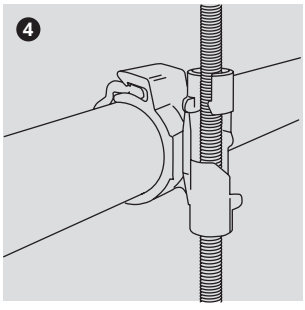


Information correct at time of going to press. Not all products are available in all regions.

# Stud Clip M8 3 1/8” & 2 Pipe



A new range of stud clips that are ideal for refrigeration and air conditioning systems.

Channel

Rod

Surface

## Key Features
**(Stud Clip (2 pipe) 3 1/8 “)**

- The Stud Clip M8 31/8” is ideal for refrigeration pipework with a versatile ratchet from 54mm to 80mm pipe sizes
- Fast fixing direct to studding
- Fits metric and imperial pipe sizes

## Key Features
**(Stud Clip 2 Pipe)**

- Offers horizontal support for pipe sets on air conditioning systems
- Available for M8 and M10 studding
- Simple to install, adjust and relocate
- Secure extendable ratchet closure
- Clip encloses both line set and cables

| SPECIFICATIONS | |
|---|---|
| Materials of construction | Nylon |
| Max. temp | 70 °C |
| Max. rec. distance per clip | 1,2 m |

| SIZING OPTIONS | | |
|---|---|---|
| Size | Part No. | Pack Qty |
| Stud Clip 80 mm (3 1/8”) | B7200/5 | 5 |
| 2 pipes 13 mm (1/2 “) – 22 mm (7/8 “) to 16 mm (5/8 “) – 28 mm (1 1/8 “) | B7205/5 | 5 |

Approximate pipe sizes (allowing for 13mm insulation)

### STUD CLIP (2 PIPE) 3 1/8“ INSTALLATION

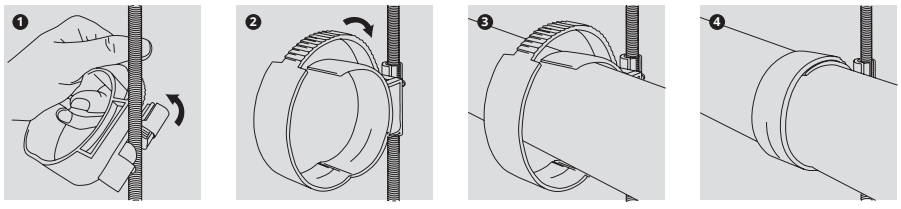


### 2 PIPE INSTALLATION

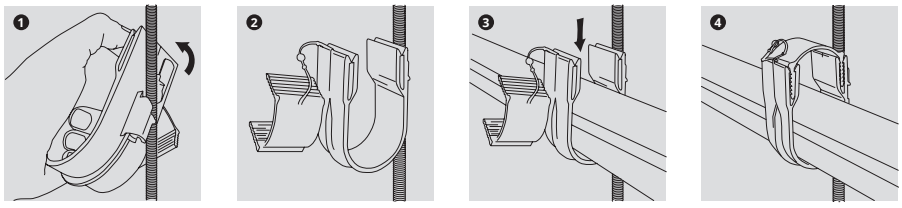


Information correct at time of going to press. Not all products are available in all regions.

# Plastic Hanger



This dual stud size clamping system will fit securely to both M8 and M10 studding.

Channel

Rod

Surface

## Key Features

- Easy installation
- Fits on both M8 and M10 studding
- Avoids the need for cable tray
- Adjustable clipping mechanism

| SPECIFICATIONS | |
|---|---|
| Materials of construction | Nylon |
| Max. temp | 70 °C |
| Max. rec. distance per clip | 1,2 m |

| SIZING OPTIONS | | | | | |
|---|---|---|---|---|---|
| Description | Liquid* | Gas* | Rod Fitting Size | Part No. | Pack Qty |
| P2 | 10 mm (3/8 ") | 16 mm (5/8 ") | 8 ou 10 mm | B6543/5 | 5 |
| P3 | 13 mm (1/2 ") | 22 mm (7/8 ") | 8 ou 10 mm | B6544/5 | 5 |
| P4 | 16 mm (5/8 ") | 28 mm (1 1/8 ") | 8 ou 10 mm | B6545/5 | 5 |
| P2 | 10 mm (3/8 ") | 16 mm (5/8 ") | 6 ou 8 mm | B6715/5 | 5 |
| P3 | 13 mm (1/2 ") | 22 mm (7/8 ") | 6 ou 8 mm | B6716/5 | 5 |
| P4 | 16 mm (5/8 ") | 28 mm (1 1/8 ") | 6 ou 8 mm | B6717/5 | 5 |

* Approximate pipe sizes (allowing for insulation)

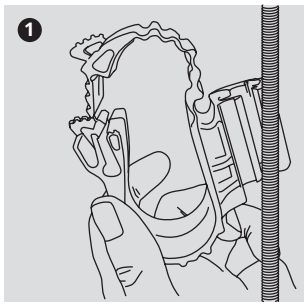


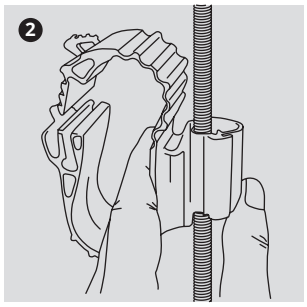


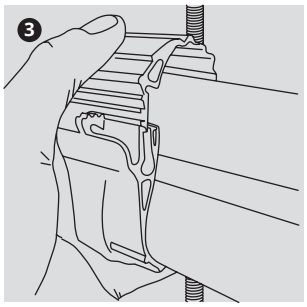


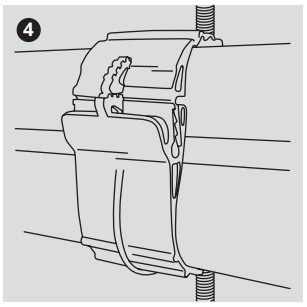


Information correct at time of going to press. Not all products are available in all regions.

# Grab Clip



The Xtra Grab Clip rod clip is ideal for air conditioning line set pairs.

Channel

Rod

Surface

## Key Features

- Grab Clip locates quickly to M8 and M10 studding
- Robust metal construction
- Snap shut lid secures pipe set
- Quick and easy pipe installation
- Wide metal construction for greater pipe support
- Can also be used for surface mount
- Ideal for when you need to meet fire regulations

| SPECIFICATIONS | |
|---|---|
| Materials of construction | Powder coated mild steel |
| Max. temp | 1000 °C |
| Max. rec. distance per clip | 1,2 m |

| SIZING OPTIONS | | | | |
|---|---|---|---|---|
| Description | Liquid* | Gas* | Part No. | Pack Qty |
| 2 | 10 mm (3/8 ") | 16 mm (5/8 ") | B2080/10 | 10 |
| 3 | 13 mm (1/2 ") | 22 mm (7/8 ") | B2081/10 | 10 |
| 4 | 16 mm (5/8 ") | 28 mm (1 1/8 ") | B2082/10 | 10 |

* Approximate pipe sizes (allowing for insulation)

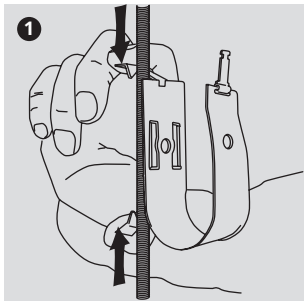


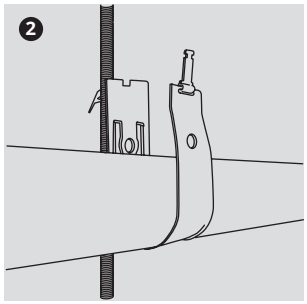


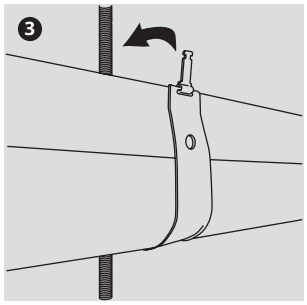


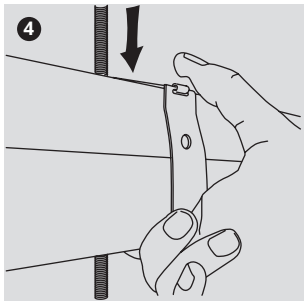


Information correct at time of going to press. Not all products are available in all regions.

# 3 Pipe Clip



The uniquely designed Xtra 3 Pipe Clip provides support for VRV / VRF systems pipework.

Channel

Rod

Surface

## Key Features

- Available for a wide range of pipe group sizes
- Locates to M8 and M10 studding
- Wide metal arms for greater pipe support
- No need for cable tray
- Hinge security cover plate fastens with one screw
- Can also be used for surface mount

| SPECIFICATIONS | |
|---|---|
| Materials of construction | Powder coated mild steel |
| Max. temp | 1000 °C |
| Max. rec. distance per clip | 1,2 m |

| SIZING OPTIONS | | | | |
|---|---|---|---|---|
| Description | Pipe groups from | Pipe groups to | Part No. | Pack Qty |
| 1 | 10 mm (3/8 ") 16 mm (5/8 ") 19 mm (3/4 ") | 13 mm (1/2 ") 19 mm (3/4 ") 25 mm (1 ") | B6361/5 | 5 |
| 2 | 13 mm (1/2 ") 28 mm (1 1/8 ") 19 mm (3/4 ") | 16 mm (5/8 ") 25 mm (1 ") 28 mm (1 1/8 ") | B6362/5 | 5 |
| 3 | 16 mm (5/8 ") 28 mm (1 1/8 ") 28 mm (1 1/8 ") | 19 mm (3/4 ") 35 mm (1 3/8 ") 28 mm (1 1/8 ") | B6363/5 | 5 |
| 4 | 22 mm (7/8 ") 35 mm (1 3/8 ") 28 mm (1 1/8 ") | 19 mm (3/4 ") 41 mm (1 5/8 ") 35 mm (1 3/8 ") | B6364/5 | 5 |

Approximate pipe sizes (allowing for 13mm insulation)

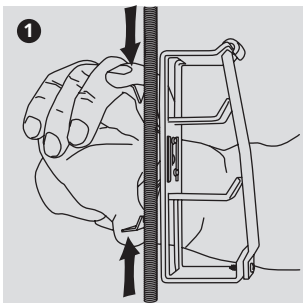


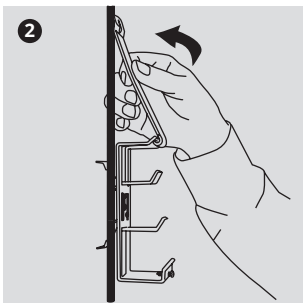


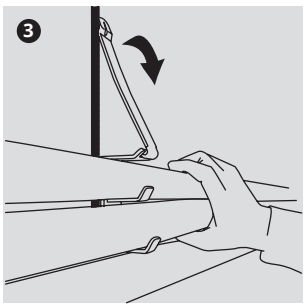


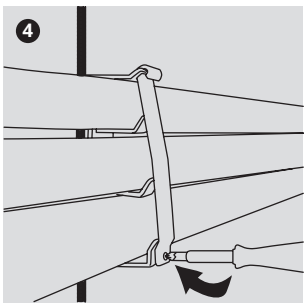


Information correct at time of going to press. Not all products are available in all regions.

# Grip Lock



Best selling versatile clip mounts to any surface.
Ideal for air conditioning line sets.

Channel

Rod

Surface

## Key Features

- Fits directly to a wall or solid ceiling
- Hinged for rapid pipe installation
- Space for electrical cables and condensate hose
- Zinc and colour passivated to resist corrosion
- Wide metal components for good pipe support

| SPECIFICATIONS | |
|---|---|
| Materials of construction | Zinc passivated mild steel |
| Max. rec. distance per clip | 1,2 m |
| Max. temp | 1000 °C |

| SIZING OPTIONS | | | | | | |
|---|---|---|---|---|---|---|
| Size | Liquid* | Gas* | Width (mm) | Height (mm) | Part No. | |
| Size 1 | 6 mm (1/4 ") | 13 mm (1/2 ") | 54 | 30 | B6186/10 | 10 |
| Size 2 | 10 mm (3/8 ") | 16 mm (5/8 ") | 60 | 32 | B6187/10 | 10 |
| Size 3 | 13 mm (1/2 ") | 22 mm (7/8 ") | 67 | 37 | B6188/10 | 10 |
| Size 4 | 16 mm (5/8 ") | 28 mm (1 1/8 ") | 80 | 46 | B6189/10 | 10 |

* Approximate pipe sizes (allowing for 13mm insulation)

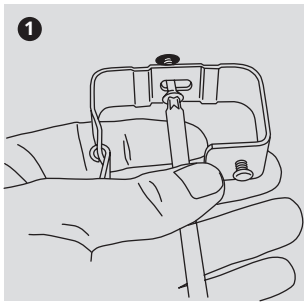


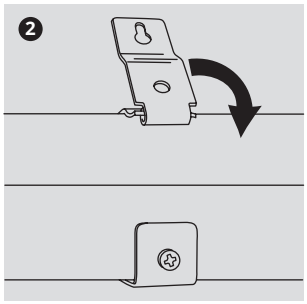


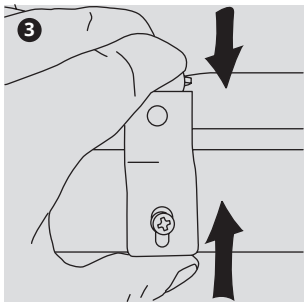


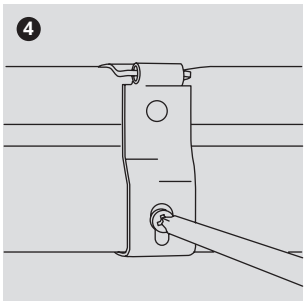


Information correct at time of going to press. Not all products are available in all regions.

# Strut Clip

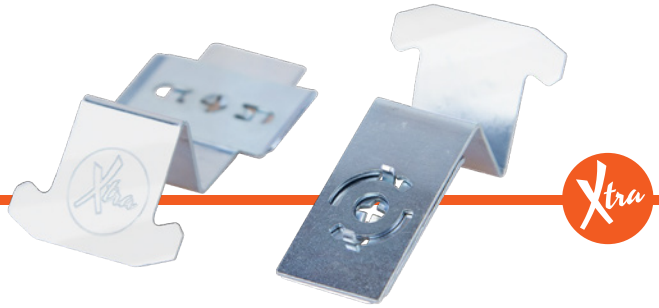

Xtra Strut Clips provide quick, secure mounting for wire cable tray installations.

- Quick and easy to install
- Secure mounting
- To be used in weather protected environment
- Load capacity: 40kg per Strut Clip
- Material: Spring Steel
- Finish: Galvanised Zinc Plated 50 Microns

| SPECIFICATIONS | |
|---|---|
| Description | Part No. |
| Strut Clip (Bag of 20) | B7000 |

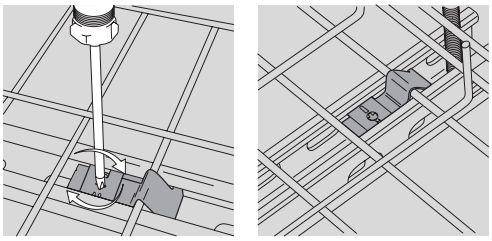

SIMPLY INSERT STRUT CLIP INTO CABLE TRAY CHANNEL, ENSURE BARBED END IS FACING DOWN.
TURN WITH A SCREWDRIVER TO LOCK INTO PLACE.

# CONDENSATION PREVENTION TAPE

Supplied in two versions (rubber or polyethylene). Class1 fire rating. Operating emperature: -15°C /+80°C.



| | Part No. | Dimensions |
|---|---|---|
| Rubber | 9898-500 | 50 x 3 mm x 10 m |
| Gray Polyethylene | 9898-501 | 50 x 3 mm x 10 m |
| White Polyethylene | 9898-503 | 50 x 3 mm x 10 m |

Self-adhesive, condensation prevention aluminum tape with strong glue. Class 1 fire rating. Operating temperature: From -15°C /+80°C.



| | Part No. | Dimensions |
|---|---|---|
| Aluminium | 9898-400 | 50 x 3 mm x 10 m |
| Reinforced Aluminum Tape | 9898-401 | 50 x 3 mm x 10 m |

VECAMCO

# VINYL TAPE

Non-adhesive elastic PVC rolls. Quick and easy to install, excellent acid resistance.

- External protective coating for insulated pipes
- Protection of underground pipes against oxidation and stray currents
- Protection of parts of manufactured items not to be treated in galvanic baths (e.g. chrome plating, zinc plating, etc.)
- Not recommended for use on pipes exposed to direct sunlight.

| Part No. | Dimensions |
|---|---|
| **9898-550-01** | 60m - h. 10 cm |
| **9898-551-01** | 25m - h. 10 cm |



VECAMCO

Information correct at time of going to press. Not all products are available in all regions.

# DrainKleen®

**CONDENSATE DRAIN UNBLOCKER**

- Ready to use
- Aerosol
- Concentrate
- Condensate pump safe

- Clears organic blockages
- Heavier than water – sinks to reach blockage site

| Part No. | Product | Qty | Size |
|---|---|---|---|
| S010188GB | DrainKleen | 4 | 5L |

**Hazardous transport.**




# DrainKleen® one shot

**CONDENSATE DRAIN CLEANER & UNBLOCKER**

- Ready to use
- Aerosol
- Concentrate
- Condensate pump safe

- Clears common blockages
- User friendly design for hard to reach areas

| Part No. | Product | Qty | Size |
|---|---|---|---|
| S010106GB | DrainKleen one shot | 12 | 250ml |

**Hazardous transport.**




# AdvancedGel DU

**CONDENSER DRAIN UNBLOCKER**

NSF
Nonfood Compounds Program Listed

- Ready to use
- Aerosol
- Concentrate
- Condensate pump safe

- Heavy-duty formula clears organic and inorganic blockages
- Heavier than water, it will sink and find the blockage
- Safe to use with condensate pumps
- Makes 8 litres

| Part No. | Product | Qty | Size |
|---|---|---|---|
| S010461R1 | AdvancedGel DU | 5 | 490 ml |

*Complies with EN1040, EN1275, EN1276 et EN14476.*




Advanced

Information correct at time of going to press. Not all products are available in all regions.

# 09
# CAGES & ACOUSTIC HOUSING


Design Box 154
Protection Guards 155
Acoustic Guards 156




ASPEN PUMPS GROUP

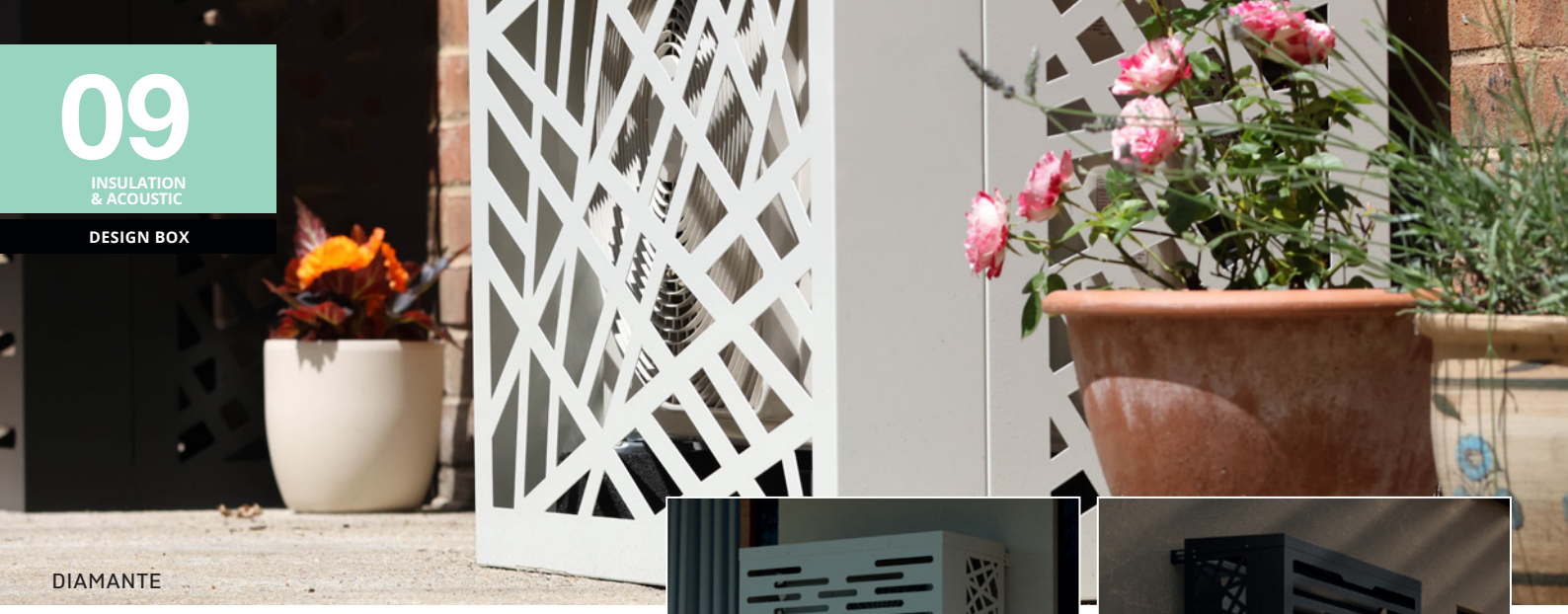
DIAMANTE


AMBRA


GIADA

# DESIGN BOX

RAL 9002 RAL 7016 RAL 9005

OUTDOOR CONDENSER UNIT COVER

Protected by a polyester powder coating, resistant to salt spray tests up to 500 hours of application time. Quick and easy assembly in minutes thanks to the quick-release fastening system. Adjustable extensions for convenient wall mounting. With our range of accessories, installation options include floor, wall or stand mounting.

AVAILABLE IN 3 MODELS AND 3 COLOURS!

## DIAMANTE

| Size | Part No. RAL 9002 | RAL 7016 | RAL 9005 | W x H x D* – mm *D min - max (Extension kit) |
|---|---|---|---|---|
| S | M38-910-71 | M38-910-16 | M38-910-95 | 900 x 680 x 450 - 650 |
| M | M38-911-71 | M38-911-16 | M38-911-95 | 1050 x 950 x 650 - 850 |
| L | M38-912-71 | M38-912-16 | M38-912-95 | 1150 x 1200 x 650 - 850 |
| XL | M38-915-71 | M38-915-16 | M38-915-95 | 1400 x 1200 x 650 - 850 |
| XXL | M38-913-71 | M38-913-16 | M38-913-95 | 1400 x 1600 x 650 - 850 |
| 3XL | M38-914-71 | M38-914-16 | M38-914-95 | 1400 x 2000 x 650 - 850 |

## AMBRA (SOUND PROOFING SYSTEM AVAILABLE)

| Size | Part No. RAL 9002 | RAL 7016 | RAL 9005 | W x H x D* – mm *D min - max (Extension Kit) |
|---|---|---|---|---|
| S | M18-910-71 | M18-910-16 | M18-910-95 | 900 x 680 x 450 - 650 |
| M | M18-911-71 | M18-911-16 | M18-911-95 | 1050 x 950 x 650 - 850 |
| L | M18-912-71 | M18-912-16 | M18-912-95 | 1150 x 1200 x 650 - 850 |
| XL | M18-915-71 | M18-915-16 | M18-915-95 | 1400 x 1200 x 650 - 850 |
| XXL | M18-913-71 | M18-913-16 | M18-913-95 | 1400 x 1600 x 650 - 850 |
| 3XL | M18-914-71 | M18-914-16 | M18-914-95 | 1400 x 2000 x 650 - 850 |

## GIADA

| Size | Part No. RAL 9002 | RAL 7016 | RAL 9005 | W x H x D* – mm *D min - (Extension Kit) |
|---|---|---|---|---|
| S | M48-910-71 | M48-910-16 | M48-910-95 | 900 x 680 x 450 - 650 |
| M | M48-911-71 | M48-911-16 | M48-911-95 | 1050 x 950 x 650 - 850 |
| L | M48-912-71 | M48-912-16 | M48-912-95 | 1150 x 1200 x 650 - 850 |
| XL | M48-915-71 | M48-915-16 | M48-915-95 | 1400 x 1200 x 650 - 850 |
| XXL | M48-913-71 | M48-913-16 | M48-913-95 | 1400 x 1600 x 650 - 850 |
| 3XL | M48-914-71 | M48-914-71 | M48-914-95 | 1400 x 2000 x 650 - 850 |

2EMMECLIMA

Information correct at time of going to press. Not all products are available in all regions.



# AGATA PROTECTIVE CAGE

RAL 9002 — 71 / White
RAL 7016 — 16 / Anthracite
RAL 9005 — 95 / Black

Protective cage for outdoor air conditioning units and heat pumps. Designed for quick installation and long service life. Thanks to a quick assembly system, no screws are required for installation. The wide range allows for the installation of a large number of units available on the market.

| | Part No. RAL 9002 | RAL 7016 | RAL 9005 | W x H x D – mm |
|---|---|---|---|---|
| S | M58-910-71 | M58-910-16 | M58-910-95 | 1050 x 950 x 650 |
| M | M58-911-71 | M58-911-16 | M58-911-95 | 1150 x 1200 x 650 |
| L* | M58-912-71 | M58-912-16 | M58-912-95 | 1150 x 1600 x 650 |
| XL* | M58-913-71 | M58-913-16 | M58-913-95 | 1150 x 2000 x 650 |
| XXL | M58-914-71 | M58-914-16 | M58-914-95 | 1400 x 1200 x 950 |
| 3XL* | M58-915-71 | M58-915-16 | M58-915-95 | 1400 x 1600 x 950 |
| 4XL* | M58-916-71 | M58-916-16 | M58-916-95 | 1400 x 2000 x 950 |

* Modular cage: composed of 2 panels

## GENERAL FEATURES

- Easy installation thanks to the wall mounting bars supplied with spirit level.
- No screws for mounting or friction points, reducing the risk of rust formation.
- Epoxy powder coating for outdoor use, resistant to salt spray tests for up to 500 hours.
- Wide range of sizes available to cover all types of air conditioners and heat pumps.
- Inspection and maintenance door with square lock for access to the outdoor unit.
- 4 pre-drilled holes for pipes and cables.
- Available in three different colours: White RAL9002, Black RAL9005, Anthracite RAL7016.
- Hidden security system: allows the panels and cover to be screwed together if necessary.
- Optional rear panel for complete closure with the possibility of fixing to the ground.
- Optional condensate collection tray.

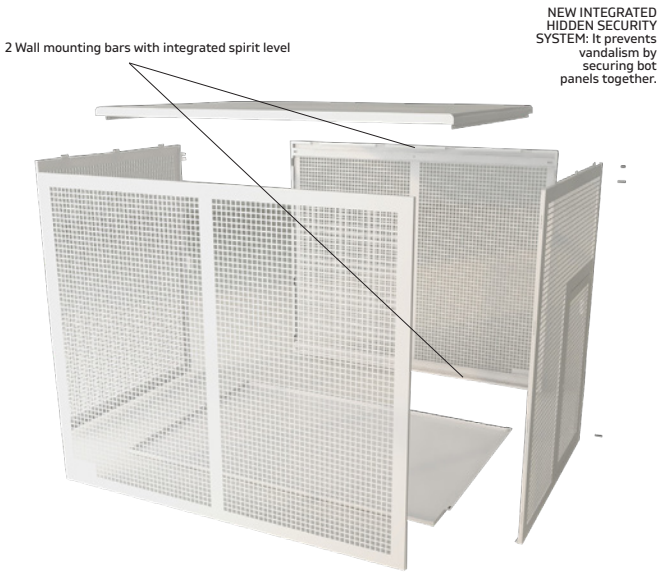


## BUILDING MATERIALS

- Galvanised steel.

## PRODUCTION PROCESS

- Punching.
- Laser cutting.
- Bending.
- Powder coating.

| Back Panels | Part No. RAL 9002 | RAL 7016 | RAL 9005 |
|---|---|---|---|
| S | M58-PS910-71 | M58-PS910-16 | M58-PS910-95 |
| M | M58-PS911-71 | M58-PS911-16 | M58-PS911-95 |
| L | M58-PS912-71 | M58-PS912-16 | M58-PS912-95 |
| XL | M58-PS913-71 | M58-PS913-16 | M58-PS913-95 |
| XXL | M58-PS914-71 | M58-PS914-16 | M58-PS914-95 |
| 3XL | M58-PS915-71 | M58-PS915-16 | M58-PS915-95 |
| 4XL | M58-PS916-71 | M58-PS916-16 | M58-PS916-95 |

| Metal Trays | Part No. RAL 9002 | RAL 7016 | RAL 9005 |
|---|---|---|---|
| S | M38-111-71 | M38-111-16 | M38-111-95 |
| M, L, XL | M38-112-71 | M38-112-16 | M38-112-95 |
| XXL, 3XL, 4XL | M38-116-71 | M38-116-16 | M38-116-95 |

2EMMECLIMA

Information correct at time of going to press. Not all products are available in all regions.



# Acoustic Housing Range

Acoustic enclosure up to 12 dB(A) sound reduction, measured according to DIN EN ISO 3744.

## ACOUSTIC HOUSING

2 models: rear air intake or lateral air intake

- Designed to reduce the noise emissions of refrigeration, air conditioners and heat pumps without compromising functionality
- Ingenious intake and exhaust air separation for optimum efficiency of the built-in outdoor unit
- Service and maintenance access possible
- Protection against weather and vandalism
- Can be adapted in colour to the environment
- Construction in Self-healing Magnelis: corrosion proof
- Sloped roof for rainwater drainage

### Easy installation HT100NP Rear air intake

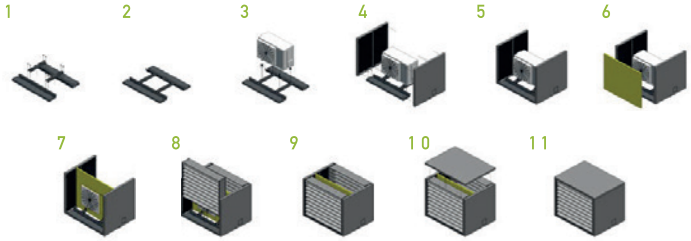


Detailed installation manual available on www.solflex.eu

### Easy installation HT100NP Lateral air intake

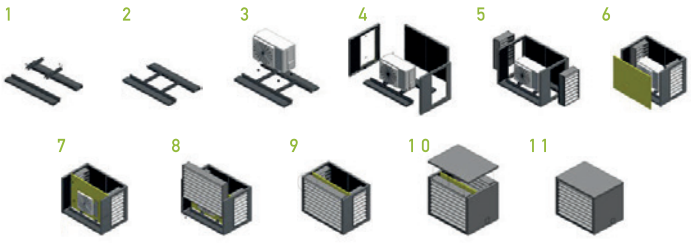




### Sound insulation HT acoustic housing

| Frequency (Hz) | 63 | 125 | 250 | 500 | 1000 | 2000 | 4000 | 8000 | 16000 |
|---|---|---|---|---|---|---|---|---|---|
| Sound insulation dB(A) | 2 | 1 | 4 | 7 | 12 | 18 | 18 | 16 | 18 |

| Solflex Type | | Housing dimensions H x W x D [mm] | Weight [kg] | Max. dimensions for installation * H x W x D [mm] |
|---|---|---|---|---|
| Principle: rear intake, front exhaust | | | | |
| HT100NP | Magnelis | 1080 x 1210 x 910 | 140 | 1010 x 1100 x 450 |
| HTX100NP | | 1080 x 1510 x 910 | 170 | 1010 x 1400 x 450 |
| HTY100NP | | 1280 x 1210 x 910 | 160 | 1210 x 1100 x 450 |
| HTXY100NP | | 1280 x 1510 x 910 | 180 | 1210 x 1400 x 450 |
| HT200NP | | 1620 x 1210 x 910 | 200 | 1550 x 1100 x 450 |
| HTX200NP | | 1620 x 1510 x 910 | 230 | 1550 x 1400 x 450 |
| HTY200NP | | 1820 x 1210 x 910 | 220 | 1750 x 1100 x 450 |
| HTXY200NP | | 1820 x 1510 x 910 | 250 | 1750 x 1400 x 450 |
| HT100NPVI | | 1080 x 1400 x 1150 | 170 | 1010 x 1250 x 700 |
| HTX100NPVI | | 1080 x 1700 x 1150 | 200 | 1010 x 1550 x 700 |
| HTY100NPVI | | 1280 x 1400 x 1150 | 200 | 1210 x 1250 x 700 |
| HTXY100NPVI | | 1280 x 1700 x 1150 | 230 | 1210 x 1550 x 700 |
| HT200NPVI | | 1680 x 1400 x 1150 | 230 | 1610 x 1250 x 700 |
| HTX200NPVI | | 1680 x 1700 x 1150 | 260 | 1610 x 1550 x 700 |
| HTY200NPVI | | 1880 x 1400 x 1150 | 250 | 1810 x 1250 x 700 |
| HTXY200NPVI | | 1880 x 1700 x 1150 | 280 | 1810 x 1550 x 700 |
| Principle: lateral intake, front exhaust | | | | |
| HT100NPS A | Magnelis | 1080 x 1510 x 910 | 140 | 1010 x 1100 x 450 |
| HTX100NPSA | | 1080 x 1810 x 910 | 170 | 1010 x 1400 x 450 |
| HTY100NPSA | | 1280 x 1510 x 910 | 160 | 1210 x 1100 x 450 |
| HTXY100NPSA | | 1280 x 1810 x 910 | 180 | 1210 x 1400 x 450 |
| HT200NPSA | | 1620 x 1510 x 910 | 200 | 1550 x 1100 x 450 |
| HTX200NPSA | | 1620 x 1810 x 910 | 30 | 1550 x 1400 x 450 |
| HTY200NPSA | | 1820 x 1510 x 910 | 220 | 1750 x 1100 x 450 |
| HTXY200NPSA | | 1820 x 1810 x 910 | 250 | 1750 x 1400 x 450 |
| HT100NPS AVI | | 1080 x 1700 x 1150 | 170 | 1010 x 1250 x 700 |
| HTX100NPS AVI | | 1080 x 2000 x 1150 | 200 | 1010 x 1550 x 700 |
| HTY100NPS AVI | | 1280 x 1700 x 1150 | 200 | 1210 x 1250 x 700 |
| HTXY100NPS AVI | | 1280 x 2000 x 1150 | 230 | 1210 x 1550 x 700 |
| HT200NPS AVI | | 1680 x 1700 x 1150 | 230 | 1610 x 1250 x 700 |
| HTX200NPS AVI | | 1680 x 2000 x 1150 | 260 | 1610 x 1550 x 700 |
| HTY200NPS AVI | | 1880 x 1700 x 1150 | 250 | 1810 x 1250 x 700 |
| HTXY200NPS AVI | | 1880 x 1700 x 1150 | 280 | 1810 x 1550 x 700 |

* The dimensions of the outdoor unit to be installed must be checked individually. For details, refer to the installation manual.

SOLFLEX

Information correct at time of going to press. Not all products are available in all regions.

# 10 ELECTRICAL





Isolators 158-159
Accessories 160


ASPEN PUMPS GROUP



# Isolator

Designed with the installer in mind. Large range of models and separate back plate for installation ease.

## Key Features

- Separate back plate with spirit level for ease of installation
- 9 models available
- Surface mountable (with and without back plate)
- Removable switch for ease of wiring
- IP66 rated for interior and exterior use
- Lockable 'OFF' position (up to 2 padlocks) and 'ON' position (1 padlock), to prevent unauthorised access
- Fully compliant to IEC 60947-3
- 5 cable entry knock-outs
- Supplied with 2 cable glands

Small 20 A / 32 A

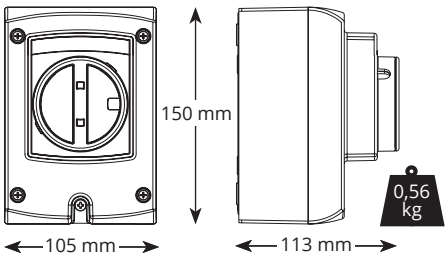


Large 40 A / 63 A

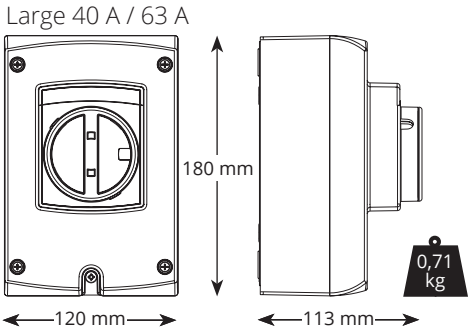


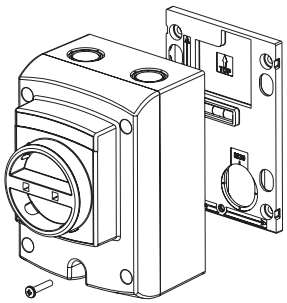

| SPECIFICATIONS | |
|---|---|
| Rated | 415V AC |
| IP Protection | IP66 |

Raw material: Rigid, self-extinguishing, impact-resistant and UV-stabilised PVC.

| SIZING OPTIONS | |
|---|---|
| Description | Part No. |
| 3-pole 20 A (small) | AX6101/2 |
| 3-pole 32 A (small) | AX6102/2 |
| 3-pole 40A (large) | AX6103/2 |
| 4-pole 20 A (small) | AX6001/2 |
| 4-pole 25 A (small) | AX6005/2 |
| 4-pole 32A (small) | AX6002/2 |
| 4-pole 40A (large) | AX6003/2 |
| 4-pole 63A (large) | AX6004/2 |

**IN THE BOX**

• Isolator • Back plate with spirit level
• M4 x 20mm screw • Install manual
• 2 x M20 glands & nuts (Small Isolator)
• 2 x M25 glands & nuts (Large Isolator)

Information correct at time of going to press. Not all products are available in all regions.




# Isolator

Designed for versatility and ease, our isolator range features simple installation, multiple size options, and universal voltage compatibility—making it the smart choice for any HVAC setup.

## Key Features

- Easy installation
- Compact and reliable
- Installation without penetrating the IP-rated enclosure
- 1 year guarantee

### Large 40-63 Amp 4 Pole

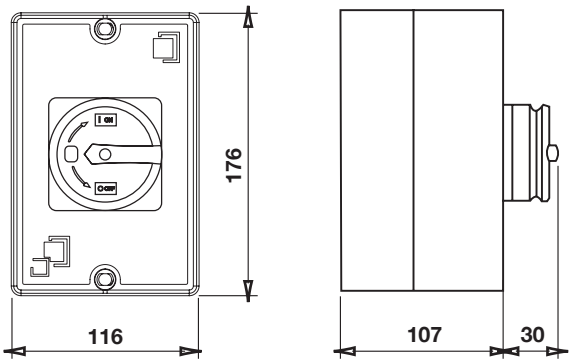


### Small 20-32 Amp 4 Pole

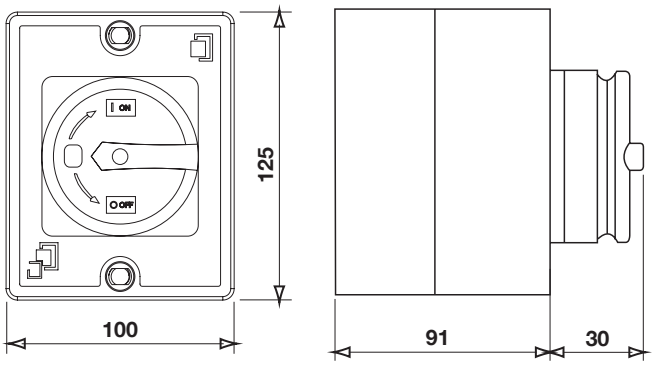


| SIZING OPTIONS | | |
|---|---|---|
| Description | Part No. | Rating |
| Small 20 Amp 4 Pole | BK20A4P | AC21-20A/AC23A-5.5KW |
| Small 25 Amp 4 Pole | BK25A4P | AC21-25A/AC23A-7.5KW |
| Small 20-32 Amp 4 Pole | BK2032A4P | AC21-32A/AC23A-11KW |
| Large 40 Amp 4 Pole | BK40A4P | AC21-63A/AC23A-22KW |
| Large 40-63 Amp 4 Pole | BK4063A4P | AC21-40A/AC23A-15KW |
| Small 20 Amp 3 Pole | BK20A3P | AC21-20A/AC23A-5.5KW |
| Small 32 Amp 3 Pole | BK32A3P | AC21-32A/AC23A-11KW |
| Large 40 Amp 3 Pole | BK40A3P | AC21-40A/AC23A-15KW |

| SPECIFICATIONS | |
|---|---|
| IP Protection | IP65 |

**IN THE BOX**

Small Isolator includes 2x M20 Cable glands
Large Isolator includes 2x M20 Cable glands

beckett®

Information correct at time of going to press. Not all products are available in all regions.



# Electrical Accessories

## Mini Pumps

### 1 AMP FUSE AND HOLDER

| Part No. |
| --- |
| FP2620 (2 per pack) |



## Persitaltic Pumps

### ULTRA BLACK+ CABLE

| Part No. |
| --- |
| FP3386 |



### ULTRA BLACK AIR CABLE

| Part No. |
| --- |
| FP3388 |



### ULTRA BLACK+ SENSOR/RESERVOIR

| Part No. |
| --- |
| FP3387 |



### ULTRA BLACK AIR TEMP. SENSOR

| Part No. |
| --- |
| FP3389 |



Xtra






## ES-6 | HEAVY DUTY 6” ELECTRICIANS SCISSORS

- Ultra tough 6” professional electricians scissors (160mm)
- Whole steel frame for high resistance & durability
- Industrial strength polypropylene handles
- With full TPR coating for superior grip & comfort
- High grade 4034 Japanese stainless steel 4.0mm thick polished blades with 40mm cutting edge
- Black ‘DLC’ (diamond-like-carbon) coating on blades for extra sharpness
- High hardness blades (58±2 HRC) with anti-slip serrated edge
- 2.5mm² & 1.5mm² wire strippers & wire crimping terminal
- Notch in the blades for cutting/stripping 50mm² cable
- Includes heavy duty nylon clip-on belt sheath
- Suitable for cutting aluminium, copper and soft cable
- Weight 153g | Dimensions Length: 160mm | Blade Length: 40mm

UNILITE

Information correct at time of going to press. Not all products are available in all regions.

# 11 MAINTENANCE




| | |
|---|---|
| Evaporator | 162-163 |
| Condenser | 164 |
| Universal | 165 |
| Drain Maintenance | 166 |
| Refrigeration & Ice Machines | 167 |
| Specialist Chemicals | 168-171 |
| Accessories | 172-174 |


ASPEN PUMPS GROUP




# PurAire

**EVAPORATOR CLEANER AND DEODORISER**

Biocide FREE

Available in three formats, Advanced PurAire combats tough odours and grease while improving indoor air quality with an eco-friendly solution, comprehensive root cause treatment, and high-definition cleaning for lasting freshness.

- Active hydrophilic no-rinse technology
- Comprehensive root cause treatment
- High definition cleaning and freshness
- Rapidly emulsifies and removes grease, nicotine, grime and smelly dirt
- Easy to use with excellent performance
- Improved energy efficiency and indoor air quality
- NSF approved
- Available in three handy formats

Condensate pump safe

NSF approved

| Part No. | Product | Qty | Size |
|---|---|---|---|
| S010197R1 | PurAire Ready To Use | 8 | 1L |
| S010126R1 | PurAire Aerosol | 12 | 600ml |
| S010160R1 | PurAire Concentrate | 4 | 5L |

# AdvancedGel EC

**EVAPORATOR CLEANER**




Ready to use

Aerosol

Concentrate

Condensate pump safe

- Powerful cleaning action will remove dirt from all waterproof surfaces effortlessly
- Improves energy efficiency of unit
- All in one indoor degreaser

| Code | Product | Qty | Size |
|---|---|---|---|
| S010458R1 | AdvancedGel EC | 5 | 490 ml |

# RTU ECD®

**EVAPORATOR CLEANER & DISINFECTANT**




Ready to use

Aerosol

Concentrate

Condensate pump safe

- Verified to kill the SARS-CoV-2 virus (which leads to Covid-19) on contact†
- Kills 99.9% of bacteria in 60 seconds or less
- Convenient ready-to-use format

| Part No. | Product | Qty | Size |
|---|---|---|---|
| S010196 | RTU ECD | 8 | 1L |
| S010192 | RTU ECD | 4 | 5L |

Advanced

Information correct at time of going to press. Not all products are available in all regions.

# OdourGuard

**ODOUR ELIMINATOR FOR A/C SYSTEMS**




Ready to use
Aerosol
Concentrate
Condensate pump safe

- Continuous guard against odour release to ensure 360° protection for filters, AHUs and duct work
- Long lasting, subtle and naturally clean fragrance
- Compliments anti-viral protectors e.g. Advanced CondenCide and RTU ECD (ISO 18184:20189)

| Code | Product | Qty | Size |
|---|---|---|---|
| S090070R1 | OdourGuard | 8 | 1L |

**Hazardous transport.**

# EasyFresh®

**ODOUR NEUTRALISER FOR AC SYSTEMS**




Ready to use
Aerosol
Concentrate
Condensate pump safe

- Specifically designed for air conditioning units
- Eliminates odours
- Produces a long-lasting fresh scent

| Part No. | Product | Qty | Size |
|---|---|---|---|
| S090049GB | EasyFresh | 12 | 400ml |

**Hazardous transport.**

# EasyCare®

**CLEANER AND DISINFECTANT FOR EVAPORATORS**




Ready to use
Aerosol
Concentrate
Condensate pump safe

- Verified to kill the SARS-CoV-2 virus (which leads to Covid-19) on contact†
- Kills 99.9% of bacteria in 60 seconds or less
- Improves indoor air quality
- Removes grease, nicotine and grime

| Part No. | Product | Qty | Size |
|---|---|---|---|
| S010127 | EasyCare | 12 | 600ml |

**Hazardous transport.**

Advanced

Information correct at time of going to press. Not all products are available in all regions.

# SuperClean™

## HEAVY-DUTY CONDENSER CLEANER

- Ready to use
- Aerosol
- Concentrate
- Condensate pump safe

- Powerful foaming action that brightens the coil and inhibits future oxidation
- Just as powerful as an acid-based cleaner, but safer to use
- Strongest coil cleaner in the market, unique formulation
- Makes 25 litres

| Part No. | Product | Qty | Size |
|---|---|---|---|
| S010171GB | SuperClean | 4 | 5L |

**Hazardous transport.**




*Dilution: 3:1

# EasyFoam®

## FOAMING CONDENSER CLEANER

- Ready to use
- Aerosol
- Concentrate
- Condensate pump safe

- Powerful formulation makes it ideal for removing stubborn dirt from problem coils
- Perfect for deep, multi-row condensers
- Part of our Easy range of products

| Part No. | Product | Qty | Size |
|---|---|---|---|
| S010132GB | EasyFoam | 12 | 600ml |

**Hazardous transport.**




# RTU CC®

## CONDENSER CLEANER

- Ready to use
- Aerosol
- Concentrate
- Condensate pump safe

- Convenient non foaming ready-to-use cleaner
- Improves system efficiency
- Great as part of a regular maintenance programme

| Part No. | Product | Qty | Size |
|---|---|---|---|
| S010195GB | RTU CC | 8 | 1L |
| S010191GB | RTU CC | 4 | 5L |




Advanced

Information correct at time of going to press. Not all products are available in all regions.

# VerteX®

## NEUTRAL PH 7 CONDENSER & EVAPORATOR CLEANER

NSF Nonfood Compounds Program Listed




Ready to use
Aerosol
Concentrate
Condensate pump safe

- Non corrosive – neutral pH 7 adaptive cleaner
- Quickly removes rust, scale, grease and fat
- Ideal for microchannel and coils with protective coatings
- Neutralises all unpleasant malodour
- Makes 25-45 litres*

| Part No. | Product | Qty | Size |
|---|---|---|---|
| S010389GB | VerteX | 4 | 5L |

*1:8 - Evaporators.1:4 - Condensers.

# EasyClean™

## UNIVERSAL COIL CLEANER




Ready to use
Aerosol
Concentrate
Condensate pump safe

- Suitable for use on both air cooled evaporators and condensers
- Convenient, high powered aerosol with a safe formulation
- Attacks only the dirt, not the coil

| Part No. | Product | Qty | Size |
|---|---|---|---|
| S010128GB | EasyClean | 12 | 600ml |

**Hazardous transport.**

# EnviroCoil®

## UNIVERSAL COIL CLEANER




Ready to use
Aerosol
Concentrate
Condensate pump safe

- Biodegradable, environmentally friendly and mild formulation
- Perfect for most maintenance, indoors or outdoors
- Contains no acids, phosphates, sodium/potassium hydroxide
- 5L: Makes 25-45 litres / 20L: Makes 100-180 litres*

| Part No. | Product | Qty | Size |
|---|---|---|---|
| S010167 | EnviroCoil | 4 | 5L |
| S010312 | EnviroCoil | 1 | 20L |

Advanced

Information correct at time of going to press. Not all products are available in all regions.

# DrainKleen®

**CONDENSATE DRAIN UNBLOCKER**




- Ready to use
- Aerosol
- Concentrate
- Condensate pump safe

- Clears organic blockages
- Heavier than water – sinks to reach blockage site

| Part No. | Product | Qty | Size |
|---|---|---|---|
| S010188 | DrainKleen | 4 | 5L |

**Hazardous transport.**

# DrainKleen® one shot

**CONDENSATE DRAIN CLEANER & UNBLOCKER**




- Ready to use
- Aerosol
- Concentrate
- Condensate pump safe

- Clears common blockages
- User friendly design for hard to reach areas

| Part No. | Product | Qty | Size |
|---|---|---|---|
| S010106 | DrainKleen one shot | 12 | 250ml |

**Hazardous transport.**

# AdvancedGel DU

**CONDENSER DRAIN UNBLOCKER**

NSF Nonfood Compounds Program Listed




- Ready to use
- Aerosol
- Concentrate
- Condensate pump safe

- Heavy-duty formula clears organic and inorganic blockages
- Heavier than water, it will sink and find the blockage
- Safe to use with condensate pumps
- Makes 8 litres

| Code | Product | Qty | Size |
|---|---|---|---|
| S010461R1 | AdvancedGel DU | 5 | 490 ml |

*Complies with EN1040, EN1275, EN1276 et EN14476.*

Advanced

Information correct at time of going to press. Not all products are available in all regions.

# Jally® Strips

**FOR CONDENSATE TRAYS**

Ready to use
Aerosol
Concentrate
Condensate pump safe

- Slime dispersing action for refrigeration systems
- 12 months protection
- Safe to use in food preparation areas

| Part No. | Product | Qty | Size |
|---|---|---|---|
| S010370GB | Jally Strips | 1 | 50 strips |
| S010371GB | Jally Strips | 1 | 6 strips |

**Hazardous transport.**

NSF Nonfood Compounds Program Listed

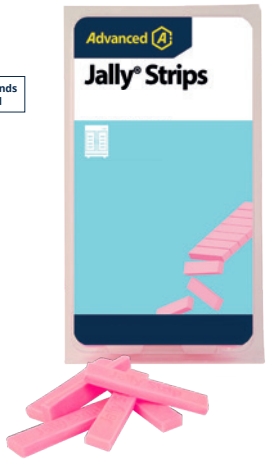


# Ice 'n' Clean®

**ICE MACHINE CLEANER**

Ready to use
Aerosol
Concentrate
Condensate pump safe

- Clears heavy limescale and slime deposits
- Nickel and aluminium safe – suitable for all ice machines
- Colour indicator ensures product is completely flushed
- New odourless formula

| Part No. | Product | Qty | Size |
|---|---|---|---|
| S010169GB | Ice 'n' Clean | 4 | 5L |

NSF Nonfood Compounds Program Listed




# AdvancedGel IMC

**ICE MACHINE CLEANER**

Ready to use
Aerosol
Concentrate
Condensate pump safe

- Clears heavy limescale and slime deposits
- Nickel and aluminum safe – suitable for all ice machines
- Colour indicator ensures product is completely flushed
- Cleans 1 unit

| Code | Product | Qty | Size |
|---|---|---|---|
| S010460R1 | AdvancedGel IMC | 5 | 490 ml |

NSF Nonfood Compounds Program Listed




Advanced

Information correct at time of going to press. Not all products are available in all regions.

# RTU® BU

**BUBBLE-UP LEAK DETECTOR**

Ready to use
Aerosol
Concentrate
Condensate pump safe

- Specifically designed for refrigerant leaks
- Produces long-lasting bubbles
- Clings to all surfaces

| Part No. | Product | Qty | Size |
|---|---|---|---|
| S010173GB | RTU BU | 8 | 1L |

**Hazardous transport.**




# EasyFind®

**BUBBLE-UP LEAK DETECTOR**

Ready to use
Aerosol
Concentrate
Condensate pump safe

- Specifically designed for refrigerant leaks
- Produces long-lasting bubbles
- Clings to all surfaces

| Part No. | Product | Qty | Size |
|---|---|---|---|
| S010350GB | EasyFind | 12 | 400ml |

**Hazardous transport.**




# EasyFinish®

**FASCIA & CASE CLEANER**

Ready to use
Aerosol
Concentrate
Condensate pump safe

- Suitable for most air conditioning units
- Safely removes finger marks etc. from plastic and metal casework
- Easily removes stubborn nicotine, grease & general grime
- Part of our Easy range of products

| Part No. | Product | Qty | Size |
|---|---|---|---|
| S010131GB | EasyFinish | 12 | 600ml |

**Hazardous transport.**




Advanced

Information correct at time of going to press. Not all products are available in all regions.

# EndoFlush®

**INTERNAL COIL & SYSTEM CLEANER**

Ready to use
Aerosol
Concentrate
Condensate pump safe

- For use after burnouts, before component changes or when retrofitting
- Will flush away sludge, carbon residues, acids, oils and water
- Low viscosity – flows easily

| Part No. | Product | Qty | Size |
|---|---|---|---|
| S010190GB | EndoFlush | 4 | 5L |




# EasyCoat™

**ACRYLIC PROTECTIVE COATING FOR COILS**

Ready to use
Aerosol
Concentrate
Condensate pump safe

- Effective corrosion protection for coils
- Indicator dye helps ensure complete coverage
- Rapid drying

| Part No. | Product | Qty | Size |
|---|---|---|---|
| S010129GB | EasyCoat | 12 | 600ml |

**Hazardous transport.**




# ScalePro™

**LIMESCALE REMOVER FOR ADIABATIC CONDENSERS**

Ready to use
Aerosol
Concentrate
Condensate pump safe

- Rapidly removes scale from condenser coils
- Restores system efficiency
- Safe on aluminium coils
- Perfect for adiabatic coolers

| Part No. | Product | Qty | Size |
|---|---|---|---|
| S010147R1 | ScalePro | 4 | 5L |




Advanced

Information correct at time of going to press. Not all products are available in all regions.

# CondenCide®

## ALKALINE EVAPORATOR CLEANER & DISINFECTANT

Ready to use
Aerosol
Concentrate
Condensate pump safe

- Verified to kill the SARS-CoV-2 virus (which leads to Covid-19) on contact†
- Kills 99.9% of bacteria in 60 seconds or less
- Improves energy efficiency and indoor air quality

| Part No. | Product | Qty | Size |
|---|---|---|---|
| S010166 | CondenCide | 4 | 5L |

**Hazardous transport.**




# PyroCool®

## FLAME RETARDANT GEL

Ready to use
Aerosol
Concentrate
Condensate pump safe

- Protects all surfaces and parts close to brazing, soldering and welding
- Reduces risk of fire by protecting surfaces and dissipating heat
- Suitable for copper, steel and aluminium pipework

| Part No. | Product | Qty | Box Qty | Size |
|---|---|---|---|---|
| S050021GB | PyroCool | 1 | 8 | 500ml |
| S050004GB | PyroCool | 1 | 8 | 1L |




# SmellyJelly®

## FRAGRANCING GEL

- Mini size: suitable for small fan coil units
- Size 1: suitable for large fan coil and cassette units




| Part No. | Product | Qty | Size |
|---|---|---|---|
| S090017 | SmellyJelly Citrus | 20 cards | Mini |
| S090018 | SmellyJelly Floral | 20 cards | Mini |
| S090050 | SmellyJelly Apple | 20 cards | Mini |
| S090020 | SmellyJelly Morning | 20 cards | Mini |
| S090021 | SmellyJelly Mountain | 20 cards | Mini |
| S090057 | SmellyJelly Orange | 20 cards | Mini |
| S090054 MWE | SmellyJelly Mixed | 20 cards | Mini |




Advanced

Information correct at time of going to press. Not all products are available in all regions.

# StayClean® Detergent Tablets

**CONDENSATE TRAY BACTERIAL CONTROL**

- Ready to use
- Aerosol
- Concentrate
- Condensate pump safe

- Preventive anti-bacterial treatment for condensate tanks
- Controls odours
- Reduces sludge build-up
- Minimises risk of blockages
- Up to 8 weeks protection

| Part No. | Qty | Size |
|---|---|---|
| S010105GB | 20 tablets | 1 pot |




# HeatClean RTU

**HEAT PUMP CLEANER**

ECO FRIENDLY

- Ready to use
- Aerosol
- Concentrate
- Condensate pump safe

- Nature-based and 100% biodegradable.
- Made from organic salts derived from natural materials
- Suspends dirt particle in the presence of high concentration of cationic surfactants, cationic esters, and cationic polymers
- Dissolves and removes dirt to extensively improve thermal properties of Heat Pumps
- Easy to use with excellent performance

| Code | Product | Qty | Size |
|---|---|---|---|
| S010163R1 | HeatCleanRTU | 8 | 1L |
| S010161R1 | HeatClean | 4 | 5L |




Advanced

Information correct at time of going to press. Not all products are available in all regions.

# HydroSprayer®

## CLEANER APPLICATOR

- Heavy duty low-pressure sprayer
- Suitable for use with all Advanced coil cleaner concentrates
- Full range of spares available

| Part No. | Product | Qty | Size |
|---|---|---|---|
| S010107 | HydroSprayer | 1 | 8L |
| S010138 | Replacement Seal Kit | 1 | – |
| S010139 | Pump Assembly | 1 | – |
| S010140 | Lance Assembly (includes nozzle) | 1 | – |
| S010141 | Handle Assembly | 1 | – |
| S010142 | Pressure Relief Valve | 1 | – |
| S010143 | Lance, Nozzle & Hose Assembly | 1 | – |




# HydroSprayer®-Elite

## BATTERY-POWERED ELECTRIC SPRAYER

- 15L tank capacity which is packaged as a back pack with supportive straps
- A 12V long-life rechargeable battery
- Powerful automatic pump that produces 60 psi at the squeeze of a trigger
- Use with Advanced concentrated and ready-mixed coil cleaner chemicals, both indoors and outdoors

| Part No. | Product | Qty | Size |
|---|---|---|---|
| S010450 | Hydrosprayer-Elite | 1 | 15L |

The HydroSprayer-Elite is NOT suitable for use with ScalePro as the hydrochloric acid will dissolve the soft PVC parts, such as gaskets and the pump membrane.




Advanced

Information correct at time of going to press. Not all products are available in all regions.

# Squeezy™

## PUMP PRIMING BOTTLE

The Squeezy pump priming bottle is the ideal contracting and service tool for checking all aspects of condensate removal.

- Allows you to check that the condensate removal pump is operating correctly
- The gooseneck spout makes it easy for the technician to dose in difficult places




| Code | Product | Qty | Size |
|---|---|---|---|
| S010149 | Squeezy | 6 | 1L |

# EasyWipes™

## PROFESSIONAL GRADE HAND WIPES

EasyWipes are professional hand wipes containing powerful yet safe cleaning agents. These convenient wipes dissolve and absorb dirt, grease, oil, paint and tar. Thanks to their sealed packaging, EasyWipes remain fresh. What's more, the packaging is so small that it can easily be stored in a toolbox or van compartment.




- New packaging with a snap-on lid, which helps keep wipes fresh for longer. Less waste!
- The package size has been increased from 50 to 100 wipes – a larger package means more product at an attractive price
- They clean surfaces quickly and effectively.
- Safe to use on hands
- Ideal for quick cleaning after work

| Part No.* | Product | Quantity | Size |
|---|---|---|---|
| S010151R1 | EasyWipes | 1 box | 12 packages |

Advanced

Information correct at time of going to press. Not all products are available in all regions.

# HookTite®




## CLEANING COVER FOR CEILING AIR CONDITIONERS

- Ideal for routine maintenance
- Protects walls, carpets and surrounding equipment whilst cleaning
- Perfect for use with Advanced coil cleaners
- Access holes and a drain tube to ensure splash-free cleaning
- Time-saving – no dust sheets and no cleaning up afterwards

| Part No. | Product | Qty | Size |
|---|---|---|---|
| S010122GB | HookTite | 5 | 1000 x 1000mm |

# TieTite®




## CLEANING COVER FOR WALL-MOUNTED INDOOR UNITS

- Ideal for use with high wall air conditioning units
- Protects walls, carpets and surrounding equipment whilst cleaning
- Provides protection to the user

| Part No. | Product | Qty | Size |
|---|---|---|---|
| S010424GB | TieTite 1 | Pack of 50 & Bucket | 930 x 450mm |
| S010426GB | TieTite 2 | Pack of 50 & Bucket | 1100 x 450mm |
| S010119GB | TieTite Size 1 | 5 | 930 x 450mm |
| S010423GB | TieTite Size 1 | Pack of 10 | 930 x 450mm |
| S010120GB | TieTite Size 2 | 5 | 1100 x 450mm |
| S010425GB | TieTite Size 2 | Pack of 10 | 1100 x 450mm |

# Mimic®




## UNIVERSAL A/C REMOTE CONTROL

- Compatible with most major air conditioner brands
- On screen ambient temperature
- Up to 4 unit codes can be stored: control 4 units at a time without reprogramming
- 1, 5 and 7 day programmable timer for more economical AC operation

| Part No. | Product | Qty |
|---|---|---|
| S080019GB | Mimic | 1 |

Advanced

Information correct at time of going to press. Not all products are available in all regions.




# 12 TOOL STORAGE & BAGS


| | |
|---|---|
| Veto EVO | 176-177 |
| Veto Pro Pac | 178-185 |
| Veto Norwalk | 186 |


Scan here for full range:

ASPEN PUMPS GROUP

Photo credit: @vetpropac_toolbags


VETO PRO PAC
TECH PAC



# evo system

VETO PRO PAC
TOOL BAGS THAT WORK

**Evo – the ultimate wearable tool bag system designed for trade. Simply attach and deploy.**

Hands free, fast access to tools, free body movement & weight distribution. Carry only what you need, where you need it.

The Evo system™ works using docks, clips and ultra strong magnets. Attach securely MOLLE tool pouches, suspenders, holsters and many attachments. One system. Countless possibilities.

## WORK TACTICAL.

**Scan for the full EVO range**







Information correct at time of going to press. Not all products are available in all regions.




# Tech-Pac

## BACKPACK TOOL BAG

Veto Pro Pac's Tech Pac is Veto's first backpack tool bag designed specifically for professional service and commissioning engineers carrying tools, laptops & service checkers. Ideal for the long walks on large sites and inner city calls outs.

- Adjustable padded shoulder straps
- Padded EVA thermoformed, ergonomic back padding
- Pocket for small tablet or laptop/multi purpose
- Internally stored aluminium hook to hang bag
- 46 interior & exterior pockets
- 5 year limited warranty

| Description | Part No. |
|---|---|
| Tech Pac | AX3501 |

| Model specific specifications | |
|---|---|
| Size mm – w/d/h | 305x230x330 (400 with handle) |
| Weight (empty) | 2kg |
| Storage/pockets | Vertical Tool Pockets: 46 interior and exterior tool pockets of various sizes. 2 Storage Bays – 4 Storage Platforms |
| Max. Payload | 23kg |
| Internal volume | 25L |
| D-Rings | 4 large and 5 small |
| S/S Tape clip | ✓ |
| Plus | Quick release metal hasp |

### Rugged materials & construction

**Waterproof base:** 3mm Injection molded Polypropylene. **Weatherproof body fabric:** 950 and 1250 PVC Impregnated denier fabric. **Weatherproof tool pocket fabric:** 1800 PVC Impregnated denier fabric. **Quick release metal hasp:** Easy access to rear storage bay and creates positive shoulder strap load connection. **Handle:** Injection molded nylon plastic with over-molded rubber grip. **YKK® Zips:** Double stitched, heavy duty plastic coil zips with oversized zip tabs. **Press studs:** 6 zinc, marine grade. **D-Rings:** Powder coated steel. **Rivets:** 38 zinc, gun metal/marine grade rivets. **Stitching:** Industrial strength double nylon stitching.

Information correct at time of going to press. Not all products are available in all regions.




VETO PRO PAC®
TOOL BAGS THAT WORK

5 YEAR ZERO DOWNTIME WARRANTY

# Tech Pac Wheeler Blackout

**WHEELED TOOLBAG**

The Tech Pac Wheeler Blackout is a rolling version of the best-selling Tech Pac Blackout backpack tool bag with an all-black colour scheme. This wheeled backpack includes new premium padded backpack straps that are completely removable. This makes stowing the backpack straps easier and allows you to choose whether the bag can function as a backpack or not. The Tech Pac Wheeler Blackout also features the V-Swap™ system. Includes a tool panel and a meter panel. Other panels sold separately.

- Optional & stowable backpack shoulder harness
- Premium removable backpack straps with extra padding and enhanced materials for increased durability and load capacity
- Thermoformed cushioned EVA back pad

| Description | Part No. |
|---|---|
| Tech Pac Wheeler Tool Bag | AX3709 |

| Model specific specifications | |
|---|---|
| Size mm – w/d/h | 280x410x610 |
| Weight (empty) | 7.25kg |
| Storage/pockets | 48 Interior and exterior tool pockets |
| Max. Payload | 28kg |
| Internal volume | 27L |
| Plus | 8” Electrical Tape Strap |
| V-SWAP | V-swap™ removable tool pocket panel system with alternate tool panels available & sold separately |

**Rugged materials & construction**

**Waterproof base:** 3mm Injection molded Polypropylene. **Weatherproof body fabric:** 950 and 1250 PVC Impregnated denier fabric. **Weatherproof tool pocket fabric:** 1800 PVC Impregnated denier fabric. **Quick release metal hasp:** Easy access to rear storage bay and creates positive shoulder strap load connection. **Handle:** Injection molded nylon plastic with over-molded rubber grip. **YKK® Zips:** Double stitched, heavy duty plastic coil zips with oversized zip tabs. **Press studs:** 6 zinc, marine grade. **D-Rings:** Powder coated steel. **Rivets:** Gun metal/marine grade rivets. **Stitching:** Industrial strength double nylon stitching.

Information correct at time of going to press. Not all products are available in all regions.




# TP-XXL

## EXTRA LARGE TOOL POUCH

A closable extra-large sized tool pouch designed with integral side mounted padded meter pockets. Each zippered meter pocket will securely fit meters up to 260mm x 90mm x 50mm. The TP-XXL can be customized to hold a variety of tools, meters, fasteners, small tablet computer (rear pocket can accommodate tablet up to 9″ x 11″), and various other gear.

- Includes rear tablet pocket & 2 Padded Meter Pockets
- “Hang-Up” Hook- Accessible While Open & Closed
- Over-Molded Rubber Grip
- Padded Shoulder Strap

| Description | Part No. |
|---|---|
| TP-XXL Tool Pouch | AX3579 |

| Model specific specifications | |
|---|---|
| Size mm – w/d/h | 305x215x80 (560 with handle up) |
| Weight (empty) | 14kg |
| Storage/pockets | 46 total exterior and interior pockets; V-Swap™ Removable Tool Pocket Panel System; Includes rear tablet pocket & 2 Padded Meter Pockets |
| Max. Payload | 14kg |
| Internal volume | 12L |
| D-Rings | 2- 2” and 5- 1” |
| S/S Tape clip | ✓ |

### Rugged materials & construction

**Waterproof base:** 3mm Injection molded Polypropylene. **Weatherproof body fabric:** 950 and 1250 PVC Impregnated denier fabric. **Weatherproof tool pocket fabric:** 1800 PVC Impregnated denier fabric. **Quick release metal hasp:** Easy access to rear storage bay and creates positive shoulder strap load connection. **Handle:** Injection molded nylon plastic with over-molded rubber grip. **YKK® Zips:** Double stitched, heavy duty plastic coil zips with oversized zip tabs. **Press studs:** 6 zinc, marine grade. **D-Rings:** Powder coated steel. **Rivets:** Gun metal/marine grade rivets. **Stitching:** Industrial strength double nylon stitching.

Information correct at time of going to press. Not all products are available in all regions.




# Tech-Pac Blackout

## BACKPACK TOOL BAG

The Tech Pac Blackout is a blacked-out tool backpack for tool storage based on our Tech Pac but with Veto Pro Pac's V-Swap™ system that comes with front and back removable tool and meter pocket panels which are also exchangeable.

**Note:** This bag comes with the tool and meter panel. You do not have to select any panels for the bag to come with the tool and meter panels though you may purchase additional panels to offer a variety of configurations. Visit website for further details.

| Description | Part No. |
|---|---|
| Tech-Pac Blackout Tool Bag | AX3561 |

| Model specific specifications | |
|---|---|
| Size mm – w/d/h | 330x250x495 (560 with handle up) |
| Weight (empty) | 5.5kg |
| Storage/pockets | Vertical Tool Pockets: 46 interior and exterior tool pockets of various sizes; Upper Pockets (Front Side) Designed For Extra Tool Capacity; Swap-Out Tool Panels- Front and Back Tool Panels are removable and exchangeable; Laptop Panel Available as an accessory (must be purchased separately) 2 Storage Bays- 4 Storage Platforms; Manifold Gauge and Hose Storage Pocket |
| Max. Payload | 23kg |
| Internal volume | 25L |
| D-Rings | 4 large and 5 small |
| S/S Tape clip | ✓ |
| Plus | 8" Electrical Tape Strap |

### Rugged materials & construction

**Waterproof base:** 3mm Injection molded Polypropylene. **Weatherproof body fabric:** 950 and 1250 PVC Impregnated denier fabric. **Weatherproof tool pocket fabric:** 1800 PVC Impregnated denier fabric. **Quick release metal hasp:** Easy access to rear storage bay and creates positive shoulder strap load connection. **Handle:** Injection molded nylon plastic with over-molded rubber grip. **YKK® Zips:** Double stitched, heavy duty plastic coil zips with oversized zip tabs. **Press studs:** 6 zinc, marine grade. **D-Rings:** Powder coated steel. **Rivets:** Gun metal/marine grade rivets. **Stitching:** Industrial strength double nylon stitching.

Information correct at time of going to press. Not all products are available in all regions.






# Hose Hauler Blackout

## SERVICE TECH HOSE BAG

The Hose Hauler Blackout is a “blacked-out” version of the existing Hose Hauler with a few added features. It includes a “suitcase-like” expansion feature that increases internal capacity, allowing you to fit more hoses, store a refrigerant scale with your hoses and gear, or hold up to 100 feet of extension cord. Inside, a removable security strap keeps hoses or extension cords fastened and prevents them from unraveling.

The bag also features three removable zippered pouches—two corner pouches and one centre pouch—for storing tools and equipment. The flap includes a dual-zippered 2-in-1 pocket that opens from the top or bottom. On the outside, there is an added hanging hook for mounting the bag and a shoulder strap for easy transport. This is the ultimate bag for hoses, extension cords, and recovery or evacuation kits.

- Water/Oil Resistant Tarpaulin Interior for easy clean up
- “Hang-up” hook - accessible while open and closed
- Expansion feature to increase internal capacity
- Removable Internal Strap to secure hoses and cords and prevent unraveling
- Shoulder strap

| Description | Part No. |
|---|---|
| Tech Pac Hose Hauler Blackout | AX3707 |

| Model specific specifications | |
|---|---|
| Size mm – w/d/h | 430x130x430 |
| Weight (empty) | 1.8kg |
| Storage/pockets | Up to 6 pockets |
| Max. Payload | 7kg |
| Internal volume | 11.2L |
| D-Rings | 2 exterior |
| Molle Straps | 2 exterior |

**Rugged materials & construction**

Water/Oil Resistant Tarpaulin Interior for easy clean up; Rugged bottom to prevent tears and scratches; YKK® Zippers

Information correct at time of going to press. Not all products are available in all regions.




# TECH PAC MCP INFRARED

## BACKPACK TOOL BAG

The TECH PAC MCP INFRARED is a compact tool backpack in the new black and red color scheme. Identical in construction and storage capacity to the TECH PAC MC BLACKOUT – with the addition of side pockets for separate meter or tool storage. The bag also features external daisy chains for attaching pouches and accessories, as well as Velcro ideal for personalizing with morale patches. The TECH PAC MCP INFRARED also features our proprietary V-SWAP™ interchangeable panel system..

The TECH PAC MCP INFRARED bag comes with the tool panel and the meter panel. you can purchase more of these items, as well as additional add-on storage items.

- Infrared colour scheme
- 51 interior and exterior pockets2 external side meter pockets
- Interior magnetic screw catcher
- External daisy chain for attaching pouches and accessories
- Quick release metal hasp supports load & allows easy access to rear storage bay
- Thermoformed cushioned EVA back pad and High Impact Polypropylene plastic base

| Description | Part No. |
|---|---|
| Tech Pac MCP Infrared | AX3703 |

| Model specific specifications | |
|---|---|
| Size mm – w/d/h | 420x420x250 |
| Weight (empty) | 4.7kg |
| Storage/pockets | 51 Interior \| 2 Exterior |
| Max. Payload | 18kg |
| Internal volume | 20.6L |
| D-Rings | 4 Exterior |
| Molle Straps | 2 Exterior |

### Rugged materials & construction

Water/Oil Resistant Tarpaulin Interior for easy clean up; Rugged bottom to prevent tears and scratches; YKK® Zippers

Information correct at time of going to press. Not all products are available in all regions.




# TECH MCTP INFRARED

## COMPACT TALL TOOL BAG

The TECH-MCTP INFRARED is a compact service tool bag in the new black and red color scheme. Identical in construction and storage capacity to the TECH-MCT BLACKOUT – with the addition of side pockets for separate meter or tool storage. The bag also features external daisy chains, for attaching pouches and accessories as well as Velcro ideal for personalizing with morale patches. The TECH-MCTP INFRARED edition comes with the V-SWAP Tool Panel, and the V-SWAP Meter Panel. Additional panels are available and sold separately.

- Infrared colour scheme
- External Velcro loop for attaching patches
- 2 external side pockets for separate meter or tool storage
- Polypropylene plastic base for moisture and abrasion protection
- External daisy chain for attaching pouches and accessories
- Neoprene Pockets for Meters/Testers
- Extra wide padded shoulder strap

| Description | Part No. |
|---|---|
| Tech Pac MCTP Infrared | AX3702 |

| Model specific specifications | |
|---|---|
| Size mm – w/d/h | 410x380x210 |
| Weight (empty) | 3.9kg |
| Storage/pockets | 55 Interior \| 2 Exterior |
| Max. Payload | 18kg |
| Internal volume | 15.3L |
| D-Rings | 6 exterior |
| Molle Straps | 2 exterior |

### Rugged materials & construction

Water/Oil Resistant Tarpaulin Interior for easy clean up; Rugged bottom to prevent tears and scratches; YKK® Zippers

Information correct at time of going to press. Not all products are available in all regions.




# TP-XXL INFRARED

## TOOL POUCH

The TP-XXL INFRARED is a closable mid-sized tool pouch in a new black and red colour scheme. It is identical to TP-XXL and includes integral side-mounted padded pockets for separate meter or tool storage. The bag also features an external daisy chain for attaching pouches and accessories

- Infrared colour scheme
- Waterproof Polypropylene plastic base
- Pass through “Hang Up” hook accessible when open or closed
- External daisy chain for attaching pouches and accessories
- Includes rear tablet pocket and two padded meter pockets
- Over moulded rubber grip
- Padded shoulder strap

| Description | Part No. |
|---|---|
| TP-XXL Infrared | AX3705 |

| Model specific specifications | |
|---|---|
| Size mm – w/d/h | 390x230x390 |
| Weight (empty) | 3.5kg |
| Storage/pockets | 47 Interior & Exterior |
| Max. Payload | 14kg |
| Internal volume | 12L |
| D-Rings | 2 Exterior |
| Molle Straps | 1 Exterior |

### Rugged materials & construction

Water/Oil Resistant Tarpaulin Interior for easy clean up; Rugged bottom to prevent tears and scratches; YKK® Zippers

Information correct at time of going to press. Not all products are available in all regions.

# NORWALK 20L BACKPACK

Part No. VT020002



## TOP FEATURES:

- Recycled water resistant 600D waxed polyester
- Simple and versatile pocket layout with Hypalon touchpoints for easy access
- Separate padded laptop compartment with tablet sleeve; can store up to 17" laptops (depending on manufacturer)
- 2 dual-purpose magnetic side pockets with zip closure, Fitting up to 40 oz water bottles and small EDC items; compatible with the Stanley Quencher, Yeti Rambler, and more
- RFID-blocking front pockets
- Low profile key clip
- Breathable micro-mesh back padding
- Trolley handle pass-through



RFID-blocking front pocket with low profile key clip



Simple and versatile pocket layout

## SPECIFICATIONS:

- DIM: 18"H x 12"W x 7"D (46cm H x 30.5cm W x 18cm D)
- WT: 4 LBS (1.8 KG)
- VOL: 20L
- MAX PAYLOAD: 25 LBS (11.30 KG)



Padded laptop compartment with tablet sleeve



Innovative magnetic side pockets fit a wide range of water bottles



Information correct at time of going to press. Not all products are available in all regions.

# 13 LIGHTING & TORCHES





| | |
|---|---|
| Site Lights | 188-190 |
| Inspection Lights | 191-201 |
| Head Torches | 202-205 |
| Flashlights | 206-207 |
| ATEX Lights | 208-210 |


ASPEN PUMPS GROUP







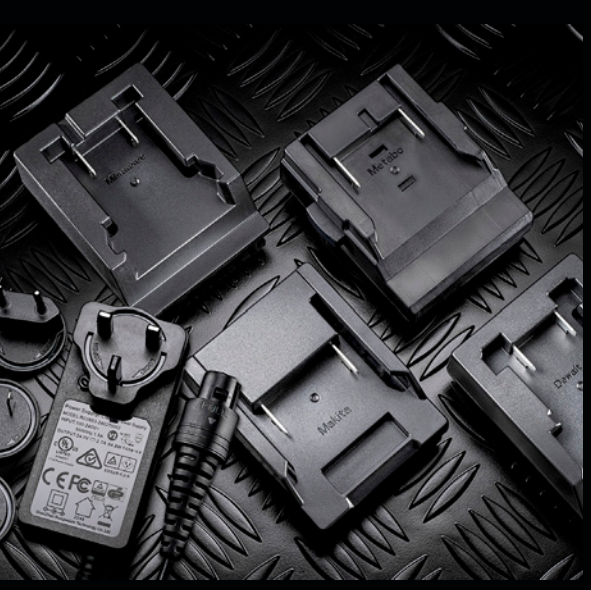





## MTB-5300 | MULTI BATTERY HYBRID WORK LIGHT

- 5300 lumen 50W 6500K COB LED
- Dual Power - rechargeable & mains powered
- Takes up to 20V 6.0Ah batteries from Milwaukee, De Walt, Makita & Metabo - 4 adapters included
- Secure battery compartment cover (note: larger 6.0Ah batteries may need to be used without cover)
- Super tough heavy duty nylon construction
- Easy carry rubber grip handle
- Rotating stand with holes for attaching tripod/magnet
- 4 x dim settings: 650 / 1350 / 2700 / 5300 lumen
- Memory Switch - remember last mode used
- Safety automatic switch-over from mains to battery in the event of power failure
- 2A USB Powerbank - works with any battery Installed
- 4 x Battery level & charging indicators
- Comes with 5 metre heavy duty 24V-2.7A H05RN-F charger/power lead (includes UK, EU, US & AU plugs)
- Unilite 14.8V 5.2Ah battery available to purchase separately (NOTE: Only Unilite battery can be charged via the lamp)

| | |
|---|---|
| **BATTERY** | Not included, bare tool |
| **WEIGHT** | 1250g |
| **DIMENSIONS** | W 238 x H 257 x D 181mm |

NOTE: runtimes based on Unilite 5.2Ah battery

UNILITE

**LUMEN** 5300LM | **RUNTIME** approx 2.5-16H | **BEAM** 95M | **IP RATING** IP65/IK07









## MTB-10000 | MULTI BATTERY 360 SITE LIGHT

- Ultra bright 10000 lumen 6500K SMD LEDs
- Multiple colour temperatures - CCT: 2700k / 3500k / 4500k / 5500k / 6500k
- Takes up to 20V 6.0Ah batteries from Milwaukee, De Walt, Makita & Metabo - 4 adapters included
- Secure battery compartment cover (note: larger 5.5Ah-6.0Ah batteries may need to be used without cover)
- Super tough heavy duty nylon & polycarbonate construction
- Milky diffuser lens for even light dispersion
- Easy carry rubber grip handle
- Concealed fold-out ultra tough steel hanging hook in base
- 2 screw holes in base for attaching magnets
- IP65 Dust & water resistant
- Heavy duty IK08 Shock proof
- Smart Memory Switch - remember last mode used
- 5 x Battery level & charging indicators
- Unilite 14.8V 5.2Ah battery available to purchase separately

| | |
|---|---|
| **BATTERY** | Not included, bare tool |
| **WEIGHT** | 3650g |
| **DIMENSIONS** | W 278 x H 256 x D 333mm |

*NOTE: runtime is based on the Unilite 14.8V 5.2Ah battery. Other batteries will vary.*

UNILITE

**LUMEN** 10000LM | **RUNTIME** approx 1-10H | **BEAM** 89M | **IP RATING** IP65/IK08




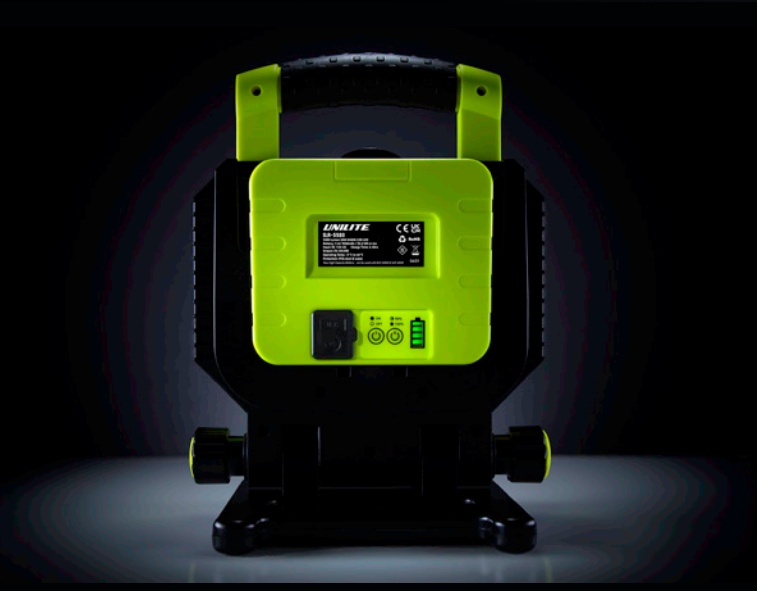

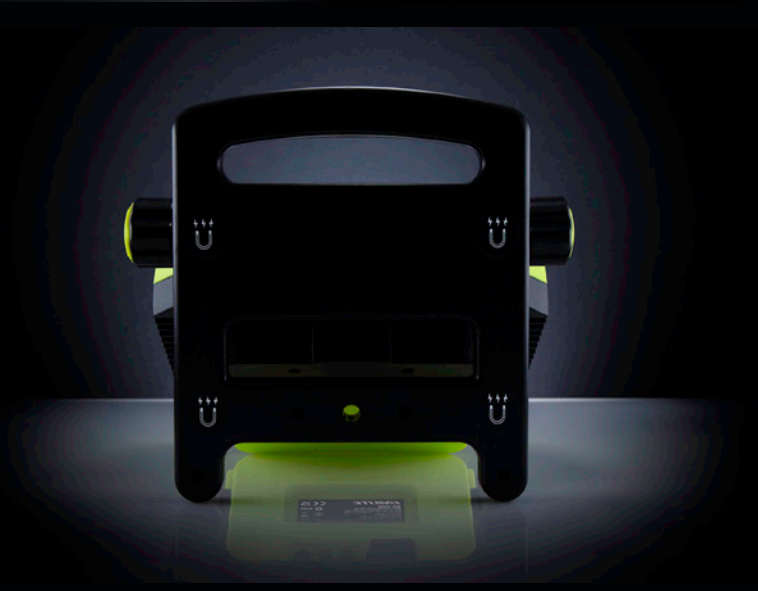

## SLR-5500 | RECHARGEABLE WORK LIGHT

- 5500 lumen 50W white SMD LEDs, 6500k
- High power 7.4v 7500mAh Li-ion battery
- Removable battery with powerful 2A USB power bank
- With battery level and charging indicators
- Tough aluminium & polycarbonate construction
- Glow-in-the-Dark strip around reflector for extra visibility
- Built-in aluminium heat sink
- Anti-slip rubber grip handle
- Adjustable head to change light angle
- Acrylic LED diffuser for even light dispersion
- Super strong magnetic base
- Mains 12V 2A multi-country charger/power lead included (inc UK, EU, US & AU adaptors)
- 4-5 hours charge time

| | |
|---|---|
| **BATTERY** | 7.4v 7500mAh Li-ion Battery Pack |
| **WEIGHT** | 2200g |
| **DIMENSIONS** | 215 x 192 x 285mm |

**LUMEN** 5500LM | **RUNTIME** 3-6H | **BEAM** 54M | **IP RATING** IP54

Information correct at time of going to press. Not all products are available in all regions.










## TL-6000 | SUPER TOUGH TRIPOD LIGHT

- Ultra bright 6000 lumen 6500K SMD LEDs
- Multiple colour temperatures - CCT: 2700k / 3500k / 4500k / 5500k / 6500k
- Dual Power - rechargeable and mains powered
- 2 Independent heads fold-out 90˚ and pivot 330˚ for light direction where its required
- Super tough heavy duty nylon, polycarbonate & aluminium construction
- Quick release set-up & fold down for rapid deployment/pack up
- Extends to 2.24m & folds down to 1.2m
- Smart Memory Switch - remembers last mode used
- IP65 dust & water resistant
- IK07 shock proof and 2m drop resistant
- High capacity 14.8V 5200mAh Li-ion battery
- 5 x Battery level and charging indicators
- Mains 20V 1.1A multi-country charger/power lead included (inc UK, EU, US & AU adaptors)
- Quick 4.5 hour charge time

| | |
|---|---|
| **BATTERY** | 14.8v 5200mAh Li-ion |
| **WEIGHT** | 4400g |
| **DIMENSIONS** | Folded: W 142 x H 1200 x D 142mm |

UNILITE

**LUMEN** 6000LM | **RUNTIME** 2-16H | **BEAM** 64M | **IP RATING** IP65/IK07

Information correct at time of going to press. Not all products are available in all regions.




## PL-3 | INSPECTION PENLIGHT

- 275 lumen white SMD LEDs, 6500k
- Die cast aircraft grade aluminium construction
- Easy press rubberised micro-switch
- 3 Light mode settings
- Strong magnetic base
- Useful rear aluminium pocket clip
- IPX4 water resistant
- 1m drop resistant

| | |
|---|---|
| **BATTERY** | 3 x 1.5v AAA Alkaline Batteries (inc.) |
| **WEIGHT** | 57g (without batteries) |
| **DIMENSIONS** | 154 x 15 x 21.5mm |

UNILITE

**LUMEN** 275LM | **RUNTIME** 3-16H | **BEAM** 23M | **IP RATING** IPX4

Information correct at time of going to press. Not all products are available in all regions.












## K-550 | COMPACT MINI WORK LIGHT

- 550 Lumen 5.7W white 6500K COB LED
- Press & Hold Turbo mode with additional red
- modes - 6 different lighting modes
- Ultra tough nylon & polycarbonate construction
- Super compact and lightweight size
- 160˚ Rotating stand with strong magnet
- Smart Memory - remembers last mode used
- Glow-in-the-Dark strip around led
- Comes with a carabiner and handy storage bag
- IPX6 water proof
- Powerful 3.7v 1200mAh li-polymer battery
- Useful battery level & charging indicators
- Fast 1A USB-C charging - 1.5 hour charge time
- 30cm USB-C charging cable included

| | |
|---|---|
| **BATTERY** | 3.7v 1200mAh Li-po |
| **WEIGHT** | 74g |
| **DIMENSIONS** | 54 x 28 x 60mm |

*550 lumen is Turbo mode and operates by 'press & hold' switch with 1 hour total runtime. High mode is 375 lumen with 3 hour runtime.

UNILITE

**LUMEN** 550LM | **RUNTIME** 1*-28H | **BEAM** 29M | **IP RATING** IPX6









## FLX-125 | TELESCOPIC MAGNETIC CAPTURE LAMP

- SMD White LED 6000K 125 lumens 1 W
- Extendable telescopic handle with flexible gooseneck to reach tight spaces
- Powerful magnet around the LED to serve as a pick-up tool
- Extends from 177 mm to 505 mm
- Ultra-lightweight compact pocket size
- Ultra-strong nylon and aluminium construction
- Smart memory switch - remembers the last mode used
- Useful pocket clip and ultra-powerful magnetic base
- Ultra-resistant IK09IP65 construction
- IP65 dust and water resistant
- Protection against overcharging and excessive discharging
- 3-colour battery level indicator
- Green to green flashing charging light
- Fast USB-C 2A charging - Charging time of 2.5 hours
- High-quality 0.5 m USB-C cable included

| | |
|---|---|
| **BATTERY** | 3.7v 180mAh Li-ion |
| **WEIGHT** | 88.8g |
| **DIMENSIONS** | 177 x Ø21 x Ø17.5mm (closed)<br>522 x Ø21 x Ø17.5mm (extended) |

**LUMEN** 125LM | **RUNTIME** 2-6H | **BEAM** 13M | **IP RATING** IP65/IK09

Information correct at time of going to press. Not all products are available in all regions.









# IL-425R | FOLDING INSPECTION LIGHT

- 425 lumen white COB LED, 6500k
- Secondary rear 150 lumen white SMD LED, 6500k
- Extra top torch - 80 lumen SMD LED, 6500k
- Ultra lightweight compact pocket size
- 180˚ vertical folding head
- Super tough aluminium & nylon construction
- Useful pocket clip
- Super strong magnetic base
- IK07 shock resistant - 2m drop resistant
- High quality 1100mAh li-ion battery
- Low battery 3x warning flash - reminds when charging is needed
- Quick 1A USB-C charging - 3 hour charge time
- 1m high quality USB-C cable included

| | |
|---|---|
| **BATTERY** | 3.7v 1100mAh Li-ion |
| **WEIGHT** | 105g |
| **DIMENSIONS** | folded 147 x 33.5 x 21 mm<br>extended 279 x 33.5 x 21 mm |

**LUMEN** 425LM | **RUNTIME** 3-6.5H | **BEAM** 31M | **IP RATING** IP20/IK07

Information correct at time of going to press. Not all products are available in all regions.




## IL-925R | FOLDABLE INSPECTION LAMP

- 925-lumen Whitehe COB LED, 6500K
- 475-lumen secondary rear Whitehe COB LED, 6500K
- Additional top torch – 150-lumen SMD LED, 6500K
- Compact, portable design
- Ultra-resistant aluminium and nylon construction
- 180˚ vertical folding head
- Super powerful magnetic base
- IK07 shock resistant – Withstands drops from 2 m
- IP54 dust and water resistant
- High-quality 2600 mAh Li-ion battery
- Battery level and charging indicators
- Fast 1A USB-C charging – 4-hour charging time
- High-quality 1 m USB-C cable included

| | |
|---|---|
| **BATTERY** | 3.7v 2600mAh Li-ion |
| **WEIGHT** | 193 g |
| **DIMENSIONS** | folded 162 x 40 x 29 mm<br>extended 304 x 33 x 29 mm |

**LUMEN** 925 LM | **RUNTIME** 2.5-9 H | **BEAM** 41 M | **IP RATING** IP54/IK07

Information correct at time of going to press. Not all products are available in all regions.

UNILITE










## SLR-1450 | COMPACT WORK LIGHT

- 1450 lumen white COB LED, 6500k
- With 150 lumen 6500k white LED flashlight
- Plus 45 lumen Red and Red flash modes
- Powerful 'LG' 3.7v 5000mAh 21700 Li-ion battery
- Super tough copolymer and aluminium construction
- 180° rotating handle/stand with carabiner snap hook
- Strong magnets within the stand
- Glow-in-the-dark strip for extra visibility
- Battery level and charging indicators
- Faster 2A USB-C charging - 3 hour charge time
- 1m high quality USB-C cable included
- Battery can be removed so a convenient spare can be kept at hand
- 21700 battery has its own USB-C port so is easily charged out of the lamp

| | |
|---|---|
| **BATTERY** | 3.7v 5000mAh 21700 Li-ion |
| **WEIGHT** | 288g |
| **DIMENSIONS** | folded H 122.5 x W 50.5 x D 50.5mm<br>extended H 219 x W 50.5 x D 50mm |

UNILITE

**LUMEN** 1450LM | **RUNTIME** 3-90H | **BEAM** 53M | **IP RATING** IPX5

Information correct at time of going to press. Not all products are available in all regions.










## SLR-1750 | WORK LIGHT WITH POWERBANK

- 1750 lumen white COB LED, 6500k
- Red LED modes for emergency / signalling / night vision
- Built-in USB power bank with multiple intelligent outputs - 5V-3A/9V-2A/12V-1A
- Super tough copolymer and aluminium construction
- 180˚ rotating handle/stand with carabiner snap hook
- Strong magnets within the stand
- Glow-in-the-dark strip for extra visibility
- Super high power 'LG' 10,400mAh battery
- Battery level and charging indicators
- Faster 4 - 4.5 hour USB-C charging with multiple inputs - 5V-3A/9V-2A
- 1m high quality USB-C cable included

| | |
|---|---|
| **BATTERY** | 3.7v 10,400mAh Li-ion |
| **WEIGHT** | 600g |
| **DIMENSIONS** | folded - 102 x 158 x 55mm<br>extended - 102 x 268 x 48mm |

**LUMEN** 1750LM | **RUNTIME** 4.5-195H | **BEAM** 50M | **IP RATING** IPX5

Information correct at time of going to press. Not all products are available in all regions.






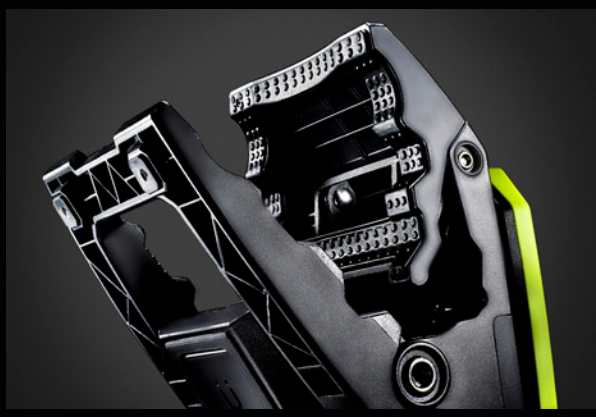




## CL-1700 | HEAVY DUTY CLAMP WORK LIGHT

- 1700 Lumen 15W white 6500k COB LED
- Ultra tough nylon & TPE over-moulded housing
- Incredibly strong jaw clamp to attach almost anywhere
- Extra strong magnet on base with 4 non-slip rubber feet
- Clamp handles allow the lamp to stand-up in various positions
- Light head lifts up/down 270˚ & rotates around 340˚
- Smart memory switch - remembers last used mode
- IK07 super tough construction
- Over-charge & over-discharge protection
- 3 battery level & charging indicators
- Low battery warning 3x flash - reminds to charge
- Supports 'PD' power delivery fast charging
- Faster 3A USB-C charging - 5 hour charge time
- 1m high quality USB-C cable included

| | |
|---|---|
| **BATTERY** | 3.7V 5200mAh Li-ion |
| **WEIGHT** | 626.4g |
| **DIMENSIONS** | 176 x 100 x 94mm |

UNILITE

**LUMEN** 1700LM | **RUNTIME** 3-22H | **BEAM** 53M | **IP RATING** IP65/IK07












## PB-10050 | SUPER HEAVY-DUTY MAGNETIC POWER BANK WITH FLASHLIGHT

- High quality 3.6V 10050mAh internal Li-ion battery
- Intelligent multiple outputs via USB-A port, supporting fast charging (5V-2A / 9V-2A / 12V-1.5A)
- Fast 2A USB-C recharging - 4.5 hr charge time
- Over-charge, over-load, deep-discharge and short-circuit protection
- 3 Battery level & charging indicator LEDs
- Super tough nylon & TPR construction
- IK07 shock proof - 2m drop proof
- IP65 dust & water proof
- Super strong magnetic base
- Sturdy rear aluminium pocket clip
- 250 Lumen 6500k SMD LED flashlight
- With a massive 75hr runtime

| | |
|---|---|
| **BATTERY** | 3.6V 10050mAh Li-ion |
| **WEIGHT** | 265g |
| **DIMENSIONS** | 114 x 65 x 32mm |

UNILITE

**LUMEN** 250LM | **RUNTIME** 75H | **BEAM** 21M | **IP RATING** IP65/IK07

Information correct at time of going to press. Not all products are available in all regions.








## NL-350R | RECHARGEABLE NECK LIGHT

- High quality 350 lumen 6500k white SMD LEDs
- Super lightweight, adjustable and comfortable
- 2 light heads can be adjusted independently
- Super tough polycarbonate & ABS construction
- Up to 120° wider lighting angle
- IK07 Shock proof - 2m drop resistant
- IP54 Dust & water resistant
- Circuit protection prevents battery from over-charging or over-discharging
- High quality 3.7v 700mAh Li-ion battery
- 3 colour LED battery level indicator
- Charging indicator - Green flash: Charging / Green: Fully Charged
- Low battery 3x warning flash - reminds when charging is needed
- USB-C charging cable included - quick 2° hour charge time

| | |
|---|---|
| **BATTERY** | 3.7v 700mAh Li-ion |
| **WEIGHT** | 140g |
| **DIMENSIONS** | 230 x 150 x 23mm |

**LUMEN** 350LM | **RUNTIME** 2-10H | **BEAM** 45M | **IP RATING** IP54/IK07

Information correct at time of going to press. Not all products are available in all regions.










## HL-4R | USB HELMET HEADTORCH

- 275 lumen white CREE LED, 6500k
- 2 x 5mm red LEDs for night vision - ON and FLASHING
- Red-to-Green charging indicator
- Easy push micro switch
- 45˚ rotational head
- Strong ABS housing
- Fully adjustable non-slip silicone headband
- 3M VHB adhesive helmet mount (included)
- 1m impact resistant
- Now Faster 1A USB-C charging - 2.5 hour charge time
- 1m USB-C charging cable included

| | |
|---|---|
| **BATTERY** | 3.7v 1800mAh Li-Polymer |
| **WEIGHT** | 78g |
| **DIMENSIONS** | headtorch 63 x 40 x 42mm |

**LUMEN** 275LM | **RUNTIME** 6.5-170H | **BEAM** 95M | **IP RATING** IPX5

Information correct at time of going to press. Not all products are available in all regions.










## HL-8R | DUAL BEAM SENSOR HEADTORCH

- 475 lumen white SMD LEDs, 6500k
- 2 x Side SMD LEDs for wide flood lighting
- 250 lumen SMD LED for long distance spot beam
- Sensor mode for hands-free operation
- Super tough construction with rubberised coating
- IK07 shock resistant
- IP65 dust & water resistant
- 1m impact resistant
- 60˚ rotational head
- Fully adjustable non-slip silicone lined headband
- Red-to-Green charging indicator light
- Fast 1A USB-C rechargeable - 2.5 hours charge time
- 1m USB-C charging cable included

| | |
|---|---|
| **BATTERY** | 3.7v 1500mAh Li-Polymer |
| **WEIGHT** | 111g |
| **DIMENSIONS** | headtorch 47.5 x 78.5 x 46mm |

**LUMEN** 475LM | **RUNTIME** 4-35H | **BEAM** 90M | **IP RATING** IP65/IK07

Information correct at time of going to press. Not all products are available in all regions.










## HT-700 | SENSOR HELMET HEADTORCH WITH RGB LED

- High power 700 lumen Dual white 6500k Cree LEDs
- White spot beam & flood beam LEDs
- Red/Green/Blue LED for night vision/map reading/ signalling
- With red flashing mode for emergency
- 150˚ Rotating head angle
- Smart Memory - remembers last white mode used
- Press & hold smooth dimming on white modes
- Optional motion sensor for hands-free activation
- IP65 Dust & water resistant
- Adjustable non-slip silicone lined headband included
- 3M VHB Adhesive helmet mount included
- Hard-shell protective zipped storage case included
- Useful battery level & charging indicator under switch
- 30cm High quality USB-C Charging cable included
- USB-C 5V-1A charging - 4 hr charge time
- 1 x 3.6V 18650 3400mAh Li-ion battery included with bi-directional USB-C port
- Battery can easily be removed & replaced, and used as an independent powerbank

| | |
|---|---|
| **BATTERY** | 1 x 3.6V 18650 3400mAh Li-ion Battery |
| **WEIGHT** | 121g (Headtorch with battery, no strap) |
| **DIMENSIONS** | Headtorch L 50.65 x W 79.5 x H 39.5mm |

**LUMEN** 700LM | **RUNTIME** 5.5-170H | **BEAM** 70M | **IP RATING** IP65

Information correct at time of going to press. Not all products are available in all regions.




## HT-1600R | SUPER BRIGHT POWERBANK HEADTORCH

- Super bright 1600 lumen 6500k white LEDs
- Easy twist smooth dimming switch
- White spot beam & flood beam LEDs
- Red LEDs for night vision & emergency/signalling
- 60˚ Rotating head angle
- Adjustable non-slip silicone lined headbands
- Smart Memory - remembers last white mode used
- IPX5 water resistant
- Hard-shell protective zipped storage case included
- 1m High quality USB-C Charging cable included
- 2 x 21700 5000mAh Li-ion batteries
- Parallel circuitry (can run on 1 or 2 batteries)
- Useful battery level & charging indicators
- Fast 5V-3A USB-C charging - 5 hr charge time
- Battery pack can be completely detached & used as an independent powerbank (5V-3A output)
- Each 21700 battery is also its own independent power bank

**BATTERY** 2 x 3.7v 21700 5000mAh Li-ion
**WEIGHT** 392g (with 2 batteries)
**DIMENSIONS** Headtorch H 40 x W 65 x D 35.5mm / Battery pack H 50 X W 106 X D 30mm

**LUMEN** 1600LM | **RUNTIME** 8-38H | **BEAM** 128M | **IP RATING** IPX5

Information correct at time of going to press. Not all products are available in all regions.










## F-1400 | DUAL POWER ALUMINIUM FLASHLIGHT

- High quality 1400 lumen white LED, 6500k
- Hard anodized die cast matte aluminium body
- Tactical rubberised tail switch
- 4 light modes and 8Hz defence strobe
- Flawless smooth reflector for long distance beam
- IP68 dust and waterproof - 1m submersible
- Impact resistant to 2m
- Built-in concealed USB-C charging port
- Battery level and charging indicator LED
- Circuit Protection prevents battery from over-charging or over-discharging
- Fast 1A USB-C charging - 2.5 hour charge time
- High quality USB-C charging cable inc. (0.5m)
- Can also work with 2 x CR123A lithium batteries (not inc.)
- Safety nylon wrist strap included

| | |
|---|---|
| **BATTERY** | 3.6V 2600mAh 18650 Li-ion (inc.) / or 2 x CR123A batteries (not inc.) |
| **WEIGHT** | 157g (with li-ion battery) / 109g (without battery) |
| **DIMENSIONS** | 140 x Ø 30x Ø 25mm |

UNILITE

**LUMEN** 1400LM | **RUNTIME** 2.5-23H | **BEAM** 180M | **IP RATING** IP68

Information correct at time of going to press. Not all products are available in all regions.







## FR-1200 | DUAL POWER RIGHT ANGLE FLASHLIGHT

- High quality 1200 lumen white LED, 6500k
- Hard anodized die cast matte aluminium body
- Head rotates to 90-degree angle
- Useful pocket clip and strong magnetic base
- Rubberised easy press side switch
- 3 light mode settings
- Flawless smooth reflector for long distance beam
- IP65 dust and water resistant
- Impact resistant to 2m
- Built-in rubberised USB-C charging port
- Battery level and charging indicator under the switch
- Circuit Protection prevents battery from over-charging or over-discharging
- Fast 1A USB-C charging - 2.5 hour charge time
- High quality USB-C charging cable inc. (0.5m)
- Can also work with 2 x CR123A lithium batteries (not inc.)

| | |
|---|---|
| **BATTERY** | 3.6V 2600mAh 18650 Li-ion (inc.) / or 2 x CR123A batteries (not inc.) |
| **WEIGHT** | 209g (with li-ion battery) / 161g (without battery) |
| **DIMENSIONS** | Extended length 160.5 x Ø 30x Ø 27mm |

UNILITE

**LUMEN** 1200LM | **RUNTIME** 3-14H | **BEAM** 180M | **IP RATING** IP65

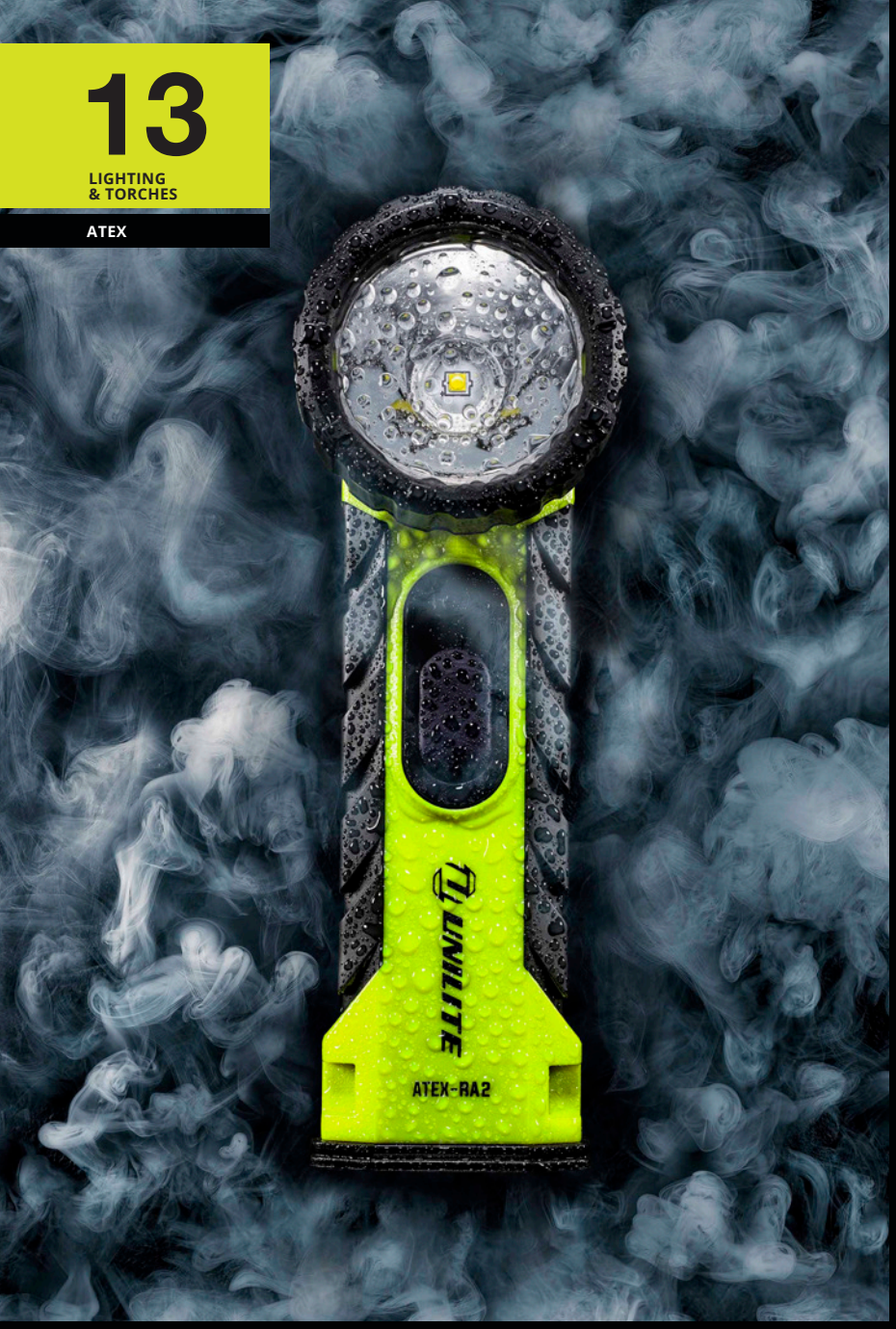






## ATEX-RA2 | ZONE 0 INTRINSICALLY SAFE RIGHT ANGLE TORCH

- 350 lumen white CREE LED, 6500k
- ATEX Zone 0 gas compliant
- Suitable for mining
- Safety release valve to release hydrogen gases
- Chemical and corrosion resistant
- Ultra strength polycarbonate housing
- Rubberised head and grips for durability
- Convenient rear stainless steel pocket clip
- Safety locking battery compartment
- Easy push micro switch operation
- IP54 dust and water resistant

| | |
|---|---|
| **BATTERY** | 4 x 1.5V AA Alkaline Batteries (not inc.) |
| **WEIGHT** | 250g (without batteries) |
| **DIMENSIONS** | 183 x 69 x 63mm |

REACH UKCA RoHS

**LUMEN** 350LM | **RUNTIME** 6.5-13H | **BEAM** 288M | **IP RATING** IP54









## ATEX-FL4 | ZONE 0 INTRINSICALLY SAFE FLASHLIGHT

- 150 lumen white CREE LED, 6500k
- ATEX Zone 0 gas compliant
- Safety release valve to release hydrogen gases
- Chemical and corrosion resistant
- Rubberized head & handle for greater durability
- Industrial strength polycarbonate housing
- Detachable pocket clip included for hands free use
- Safety locking battery compartment
- Polycarbonate lens and smooth reflector for long distance beam
- Optional brackets available for helmets
- IP67 dust and waterproof
- 3m submersible

| | |
|---|---|
| **BATTERY** | 4 x 1.5V AA Alkaline Batteries (not inc.) |
| **WEIGHT** | 115g (without batteries) |
| **DIMENSIONS** | 174 x 47 x 47mm |

**LUMEN** 150LM | **RUNTIME** 6-69H | **BEAM** 235M | **IP RATING** IP67

Information correct at time of going to press. Not all products are available in all regions.







## ATEX-H2 | ZONE 0 INTRINSICALLY SAFE HEADTORCH

- 225 lumen white CREE LED, 6500k
- ATEX Zone 0 gas compliant
- Safety release valve to release hydrogen gases
- Strong ABS housing with durable synthetic rubber coating
- Safety locking battery compartment
- Easy press rubberised switch
- 2 mode light settings
- 90˚ rotational head
- Silicone lined non-slip headband included
- IP67 dust and waterproof
- 1m submersible

| | |
|---|---|
| **BATTERY** | 3 x 1.5V AAA Alkaline Batteries (not inc.) |
| **WEIGHT** | 130g (without batteries) |
| **DIMENSIONS** | headtorch 80 x 50 x 45mm |

**LUMEN** 225LM | **RUNTIME** 5-12H | **BEAM** 115M | **IP RATING** IP67

Information correct at time of going to press. Not all products are available in all regions.

Safety Glasses 212-214
Cut & Impact-Resistant Gloves 215
Zipped Jumpers 216


# 14 PPE




ASPEN PUMPS GROUP









## SG-YFG | SAFETY GLASSES WITH CLEAR LENSES & FOAM GASKET

- Tough flexible polycarbonate frame
- 8-Base curved toughened polycarbonate clear lenses
- Hytrel black back frame with EVA foam gasket
- K & N anti-scratch & anti-fog lens coatings
- 99% UV A/B/C protection (EN170)
- Flexible PC & TPR co-injected side arms
- With side temple ventilation
- Adjustable TPR non-slip nose pads
- Reinforced nose bridge
- Micro-fibre drawstring storage bag included

LENS MARKINGS

- Lens Filters: 2C (UV EN170) 1.2 (Clear)
- Optical Class: 1 (high optical quality)
- Lens Coatings: Anti-Scratch - K Anti-Fog - N
- Mechanical risk: Low energy impact - F
- High speed particles at extreme temperatures - T

**WEIGHT** 39.5g

**CERTIFICATIONS** CE - EN166 / USA - ANSI Z87.1 / AUS/NZ - AS/NZS 1337.1

Information correct at time of going to press. Not all products are available in all regions.









## SG-YCB | SAFETY GLASSES WITH CLEAR BLUE LIGHT LENSES

- Tough flexible polycarbonate frame
- 8-Base curved toughened polycarbonate lenses
- Clear 420Cut blue light blocking lenses
- Blocks harmful HEV blue light up to 420nm
- K & N anti-scratch & anti-fog lens coatings
- 99% UV A/B/C protection (EN170)
- Flexible PC & TPR co-injected side arms
- Adjustable rubberized non-slip nose pads
- Reinforced nose bridge
- Micro-fiber drawstring storage bag included

LENS MARKINGS

- Lens Filters: 2C (UV EN170) 1.2 (Clear)
- Optical Class: 1 (high optical quality)
- Lens Coatings: Anti-Scratch - K Anti-Fog - N
- Mechanical risk: Low energy impact - F
- High speed particles at extreme temperatures - T

**WEIGHT** 1oz

**CERTIFICATIONS** CE - EN166 | USA - ANSI Z87.1 | AUS/NZ - AS/NZS 1337.1








## SG-YDS | SAFETY GLASSES WITH DARK SMOKE LENSES

- Tough flexible polycarbonate frame
- 8-Base curved toughened polycarbonate lenses
- Dark smoke lens tinting
- K & N anti-scratch & anti-fog lens coatings
- 99% UV A/B/C protection (EN172)
- Flexible PC & TPR co-injected side arms
- Side temple ventilation
- Adjustable rubberised non-slip nose pads
- Reinforced nose bridge
- Micro-fibre drawstring storage bag included

LENS MARKINGS

- Lens Filters: 5 (UV EN172) 2.5 (Dark Smoke)
- Optical Class: 1 (high optical quality)
- Lens Coatings: Anti-Scratch - K Anti-Fog - N
- Mechanical risk: Low energy impact - F
- High speed particles at extreme temperatures - T

**WEIGHT** 28g

**CERTIFICATIONS** CE - EN166 / USA - ANSI Z87.1 / AUS/NZ - AS/NZS 1337.1




| | | S/7 | M/8 | L/9 | XL/10 | XXL/11 |
|---|---|---|---|---|---|---|
| Longest finger length to cuff | Inches | 9 | 9 ½ | 10 | 10 ¼ | 10 ½ |
| | CM | 22.5 | 24 | 25 | 26 | 27 |
| Palm width at the Knuckles | Inches | 3 ¼ | 3 ½ | 3 ½ | 4 | 4 |
| | CM | 8.5 | 8.75 | 9 | 10 | 10.5 |
| *there may be variances in measurements due to hand cutting & stitching* | | | | | | |

# UG-12C4 | HEAVY DUTY CUT-D IMPACT GLOVES

- Cut resistant gloves with full dorsal TPR impact protection
- Flexible lightweight design, TPR weighs less than 60g
- Heavy duty 15-Gauge high-performance polyethylene (HPPE) yarn interwoven with steel and glass fibres for added strength and high cut resistance
- Sandy nitrile half-dip coating offers excellent grip
- TPR is sonic welded to the glove for greater longevity
- Adjustable TPR velcro wrist strap for secure fit
- Synthetic leather stitched cuff for durability
- Touch screen technology
- EN388 mechanical hazard protection: 4X42DP - cut level D
- ANSI/ISEA 138 impact resistant level 2
- ANSI cut resistant level A4
- Available in 5 EU sizes - 7/S, 8/M, 9/L, 10/XL & 11/XXL.

EN388
4X42DP

ANSI
A4
CUT

ANSI/ISEA 138
2

**CERTIFICATIONS** EN ISO 21420:2020 | EN388:2016+A1:2018 | ANSI/ISEA 2016 | ANSI/ISEA138:2019









# ZFJ | FLEECE LINED JUMPER

- 260gsm Thick 100% polyester black zipped jumper
- Soft brushed fleece lining for superior warmth
- Hi-vis yellow and reflective details for added safety
- Elastic zip pull tabs ensure effortless access, making it a breeze to reach for your essentials on the go
- Unilite branded YKK 'reversed' zippers, delivering a double dose of water and wind resistance
- Windbreaker flap on main zip, creating an impenetrable barrier against chilling gusts
- Branded reflective elasticated cuffs to keep the cold out, fusing practicality with style

| | | S | M | L | XL | 2XL | 3XL |
|---|---|---|---|---|---|---|---|
| Chest Size | **Inches** | 39 ½ | 41 | 43 | 45 ½ | 48 | 50 |
| | **CM** | 100 | 104 | 109 | 115 | 121 | 127 |
| *there may be a 1-3cm difference in measurements due to hand cutting* | | | | | | | |

UNILITE




ASPEN PUMPS GROUP

# The Brands

Making life easier for the HVAC/R engineer

Aspen Pumps are at the forefront of condensate pump technology. As engineers, we understand the complexity of installations and so create market leading products that are designed to best suit the application and environment. We pride ourselves on providing professionals with everything they need for the perfect installation; from pumps to pipe we have it all.










Information correct at time of going to press. Not all products are available in all regions.

Aspen Xtra represents the largest range of installer ancillaries on the market – from Isolators to pipe connectors, wall brackets to vinyl tubing – whatever you need, reach for Xtra.










Information correct at time of going to press. Not all products are available in all regions.

# 2EMMECLIMA

2 Emme Clima was founded in Italy in 2008 and, thanks to its expertise, quickly became one of the largest companies in the air conditioning sector. The company is represented both on the Italian market and worldwide and specialises in the production of support brackets and accessories for condensing units. With the integration of a paint shop, 2 Emme Clima became the first company in Europe with a complete production process. To date, over 1,000,000 wall brackets have been produced and sold, making 2 Emme the preferred choice for installers in Europe. In 2022, 2 Emme Clima joined the Aspen Pumps Group family of brands.



VECAMCO®

Vecamco is an Italian company with over 40 years of experience in the processing of plastics and metals. Specialised in the production of accessories for air conditioning, heating, and components for ventilation and air treatment. Over the years, Vecamco has quickly established itself as a leading company both nationally and internationally in this sector, offering a wide range of products known for their high quality and continuous innovation. These attributes are the result of ongoing research aimed at meeting customer needs and developing efficient, modern, and innovative solutions.
In 2022, Vecamco became part of Aspen Pumps Group.



Information correct at time of going to press. Not all products are available in all regions.

Joining the Aspen Pumps Group in 2018, Advanced is the recognised market leader in specialist HVAC/R cleaning chemicals. The research and development team at Advanced has created a range of chemical cleaning products designed to give optimum cleaning performance across a variety of applications and environments. Trusted by engineers to do the job right, Advanced has been supplying products to the HVAC/R industry for over 30 years.









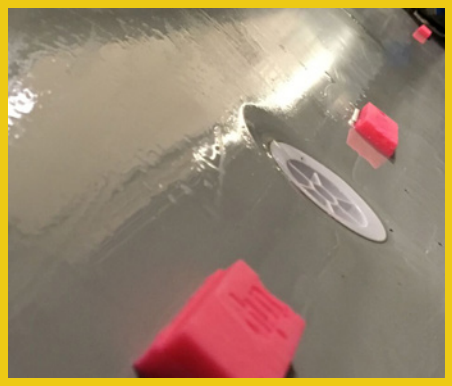



Information correct at time of going to press. Not all products are available in all regions.

JAVAC + JAVAC EDGE

The JAVAC brands have a proud heritage of supplying quality and premium tools to the HVAC/R industry. The devil is in the detail and for over 50 years the JAVAC brand has stood for reliability and service – making JAVAC, and JAVAC Edge, one of the UKs most trusted names in HVAC/R service equipment. As part of the Aspen Pumps Group, our focus is on products which make the installer's life easier.












Photo credit: Top left clockwise: @godfreylappage, @hvac_spark, @temp_technical, @temp_technical, @hvac_spark

Information correct at time of going to press. Not all products are available in all regions.

# SPECTROLINE®

Spectroline has over 65 years designing and manufacturing high-quality fluorescent leak detection dyes and ultraviolet lamps. Our dyes glow brighter than the competition and is a simple and smart investment for detecting leaks whilst working as preventative maintenance revealing leaks in the future. Aspen Pumps Group are a proud and exclusive distributor of Spectroline in the UK.



Information correct at time of going to press. Not all products are available in all regions.

# C&D VALVE

C&D Valve is a well-established US manufacturer of valves and fittings, with a strong reputation in the HVAC/R sector.

Established in 1967 in Oklahoma City, C&D continues to offer unrivalled product quality and service. Recently acquired by the Aspen Pumps Group, a leading global manufacturer of air conditioning and refrigeration aftermarket products, C&D marks an important step in Aspen's UK manufacturing and sales capabilities.




Information correct at time of going to press. Not all products are available in all regions.

# UNILITE

Unilite has built lights tough since 1981. The range back then was limited to just a handful of product lines. Wind the clock forward 43 years and now there are over 125 products, all with the same Built. Tough. DNA.











Information correct at time of going to press. Not all products are available in all regions.

VETO PRO PAC®
TOOL BAGS THAT WORK

The toughest and most versatile tool bag you'll ever own. Maximised tool storage capacity – you will never be short on space. Waterproof base, double stitched, heavy duty plastic coil over sized zips. Industrial strength double nylon stitching. D-Rings: Powder coated steel. Zinc/marine grade press studs. Gun metal/marine grade rivets. Wheels, backpacks, open tops, pouches. Aspen Pumps Group are proud to deliver these superb bags designed for the HVAC/R technician.









Photo credit: Top left clockwise: Veto Pro Pac, BassFilmco/Epic Air, @alstoolchannel.

Scan me for the full range of Veto Bags.**vetopropac.com**

Information correct at time of going to press. Not all products are available in all regions.

BIG FOOT®
SYSTEMS

Our aim at Big Foot Systems continues to be 'to provide easy to assemble rooftop building services support systems'. Our range of products provide quick, simple, safe and versatile solutions for the support of rooftop HVAC/R equipment, and access platforms.

Big Foot Systems sets the standard on any installation, meeting the needs of architects, consultants, engineers and contractors. Big Foot products are packed for ease of handling and available internationally via a network of approved distributors.


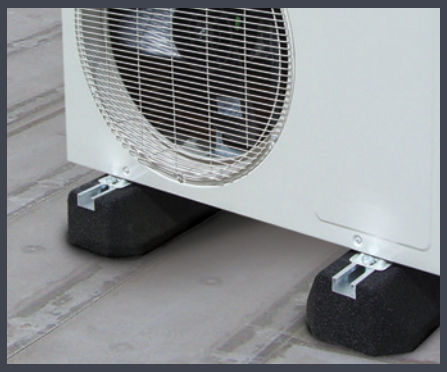





Information correct at time of going to press. Not all products are available in all regions.

SOLFLEX
Acoustic solutions

Solflex, designer and supplier of high-quality acoustic insulation solutions, reduces noise emissions from your air conditioning, refrigeration or heat pump installations to negligible levels without limiting their functionality. Whether you need to comply with regulatory and planning requirements or simply reduce noise levels for yourself or your neighbours, we have a product for you.

We offer packaged solutions for simple installations through to complex bespoke solutions and can assist installers, wholesalers, design offices, consultants, architects, as well as private and commercial building owners and facility operators.




*The sound insulation performance of our acoustic enclosures is measured by the Ziehl-Abegg laboratory in accordance with DIN EN ISO 3744.*

Information correct at time of going to press. Not all products are available in all regions.

Notes

Notes

Notes

Notes

Information correct at time of going to press. Not all products are available in all regions.




aspenpumps.com

**ITALY**
Aspen Pumps Italia
Via dell'industria 17,
35030 Bastia di Rovolon (PD) - Italy
Tel: +39 049-9903985

**UNITED KINGDOM**
Aspen Pumps Group
Apex Way, Hailsham,
East Sussex BN27 3WA, UK
Tel: +44 (0)1323 848842

**GERMANY**
Aspen Pumps Deutschland
Tichauer Weg 30,
40231 Düsseldorf, Germany
Tel: +49 0211 46 79 79

**INDIA**
Aspen Pumps India
333, 3rd Floor Devika Tower,
6 Nehru Place, Delhi 110019, India
Tel: +44 (0)1323 848842 (UK Office)

**SPAIN**
Aspen Pumps Iberia
C/Óptica, 10, 08755 Castellbisbal,
Barcelona, Spain
Tel: +34 93 5458616

**FRANCE**
Aspen Pumps France
353, Allée des Vergers,
76360 Barentin, France
Tel: +33 (0)1 78 95 88 82

**AUSTRALASIA**
Aspen Pumps Asia Pacific Pty Ltd
8 Waddikee Rd, Lonsdale,
SA 5160, Australia
Tel: +61 (0)8 8186 4666

**NORTH AMERICA**
The Malco Group
14080 State Hwy 55 NW | PO Box 400
Annandale, MN 55302-0400 USA
Tel: 1-800-328-3530

A1924 UK 061126