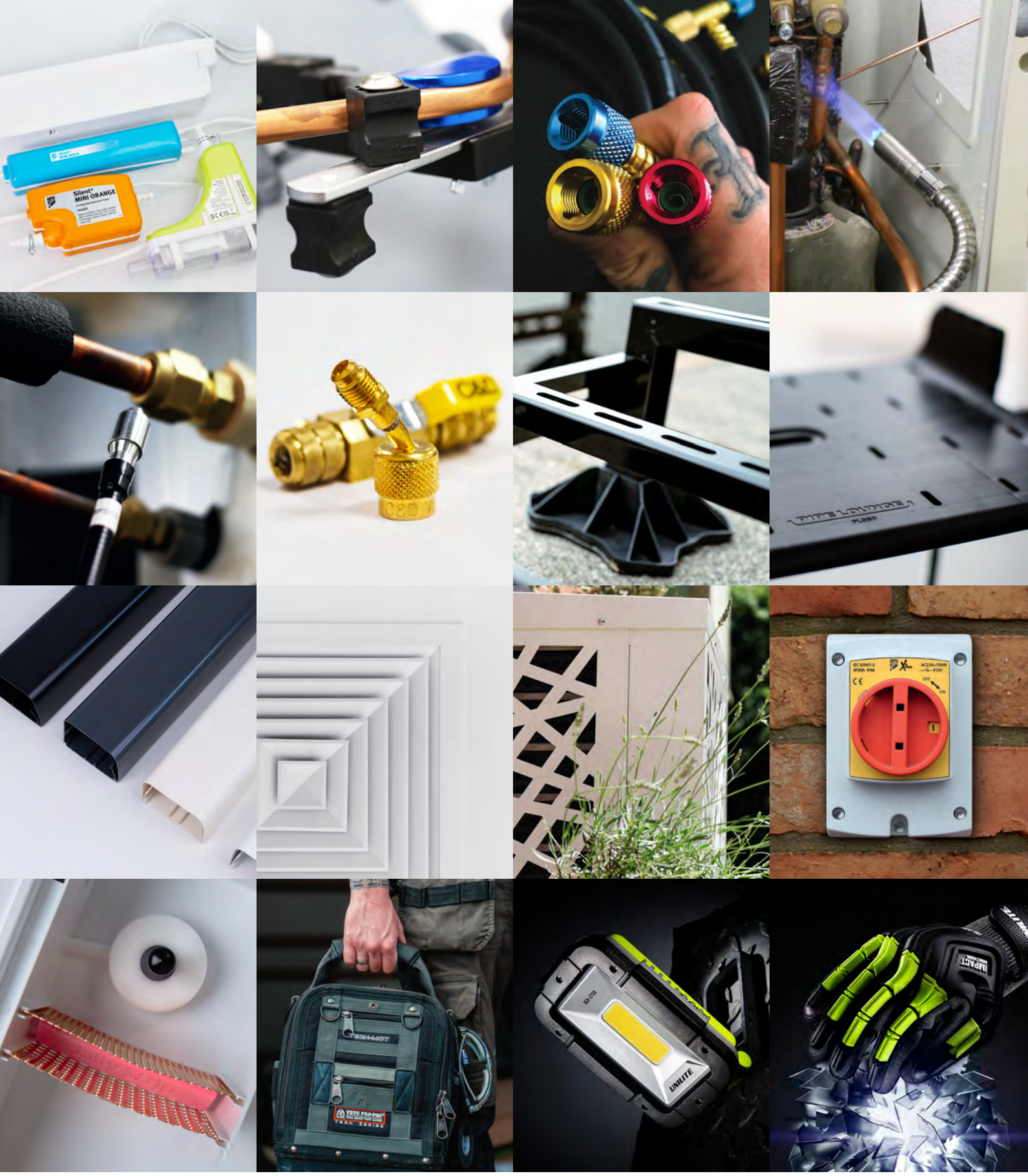

ASPEN PUMPS GROUP

Product Guide

Making life easier for the HVAC/R engineer


TOSH

Contents

01 Condensate Removal Pumps
- Silent+ Mini Pumps (The World's Quietest) 6-11
- Mini Pumps 12-16
- Peristaltic Pumps 17-19
- Tank Pumps 20-27
- Supermarket Pumps 28-32
- Boiler Pumps 33-36

02 Service & Tooling
- Hand Tools 38-51
- Knives / Cutters 52-54
- Lifters 55-56

03 Vacuum & Charging
- Recovery Units 58-62
- Vacuum Pumps 63-65
- Ultimate Hi-Flow 66-74
- Hose 75-79
- Kits 80
- Manifolds 81
- Gauges & Oils 82-83
- Thermometers 84
- Scales 85-86
- Nitrogen 87-89
- Accessories 90

04 Brazing & Welding
- Brazing & Welding Kits 92
- Brazing & Welding Torches 93-5
- Heat Blockers & Accessories 96

05 Leak Detection
- Electronic 98-99
- Sprays 100
- Ultra Violet 101-104

06 Brass & Copper Fittings
- About C&D 106-107
- Service Kits 108-110
- Smartlock 111-112

07 Support & Mounting
- Rubber Feet 114-117
- PVC Mounting Blocks 118
- Support Feet 119-121
- Heat Pump Kit 122
- Frames 123-126
- Wall Brackets) 127-135
- Roof Brackets 136
- Anti-Vibration Dampers 137-139
- Anti vibration pads & strips 140
- Trays 141
- Accessories 142

08 Condensate Management & Drainage
- Vinyl Tubes 144
- Rigid Pipe 145
- Flexible Tubes 146-147
- Pre-Installation Boxes 148
- Traps 149
- Drainage Fittings & Spares 150
- Pipelounge 151
- Connectors & Pipe Support 152-160
- Tape 161
- Drain Cleaner & Unblocker Range 162

09 Trunking
- Trunking Lengths 164-165
- Trunking Fittings 166-167
- Trunking Accessories 168

10 Ventilation
- Rectangular & Round Grills 170

11 Insulation & Acoustic
- Design Box 172
- Protection Guards 173
- Acoustic Guards 174

12 Electrical
- Isolators 176-177
- Accessories 178

13 Maintenence
- Evaporator 180-181
- Condenser 182
- Universal 183
- Drain Maintenance 184
- Refrigeration & Ice Machines 185
- Specialist Chemicals 186-188
- Accessories 189-191
- Heat Pump Cleaners 192

14 Tool Storage & bags
- Veto Evo 194-203
- Veto Pro Pac Tool Bags 204-210
- Norwalk Bags 211-214

15 Lighting & Torches
- Site Lights 216-224
- Inspection Lights 225-235
- Head Torches 236-239
- Flashlights 240-241
- ATEX Lights 242-244

16 PPE
- Safety Glasses 246-248
- Cut & Impact-Resistant Gloves 249
- Zipped Jumpers 250

The Brands 251

Information correct at time of going to press. Not all products are available in all regions. This document has been translated using AI and may contain inaccuracies.

ASPEN PUMPS GROUP

Aspen Pumps Group is unique in its global reach, trading in over 100 countries worldwide.

However, Aspen is not purely an export business; it is a multi-national organisation with sales teams across the world with offices in 4 continents. Our continuous investment in people and warehouse infrastructure means we are a leader in the provision of service, quality and customer support. This approach to business means we have the most extensive and well supported wholesaler partnership network in the world.

The Aspen Pumps Group takes pride in its business performance, celebrating success in its core capabilities of Enterprise, Innovation and International Trade through winning Queen's Awards for each (2009, 2014, 2019).

Aspen Pumps Group – a global award winning business.

Ropemakers, Hailsham UK:
Our new 33,500sq ft warehouse ready to house our ever expanding portfolio of products. Just one of our many warehouses across the globe designed to give you the best in customer service.

Information correct at time of going to press. Not all products are available in all regions. This document has been translated using AI and may contain inaccuracies.

Silent+ Mini Pumps	6-11
Mini Pumps	12-16
Peristaltic Pumps	17-19
Tank Pumps	20-27
Supermarket Pumps	28-32
Boiler Pumps	33-36

01 CONDENSATE REMOVAL PUMPS



ASPEN PUMPS GROUP

Silent+ Mini Pumps

Today end users are demanding quieter air conditioning pumps in areas such as offices and hotels. Silent+ pumps are perfectly suited for these types of applications. The Silent+ range is designed around a 'total system approach' to ensure they operate as quietly as possible without compromising on performance.



Silent+ Mini White



Silent+ Mini Lime



Silent+ Mini Aqua



Silent+ Mini Orange

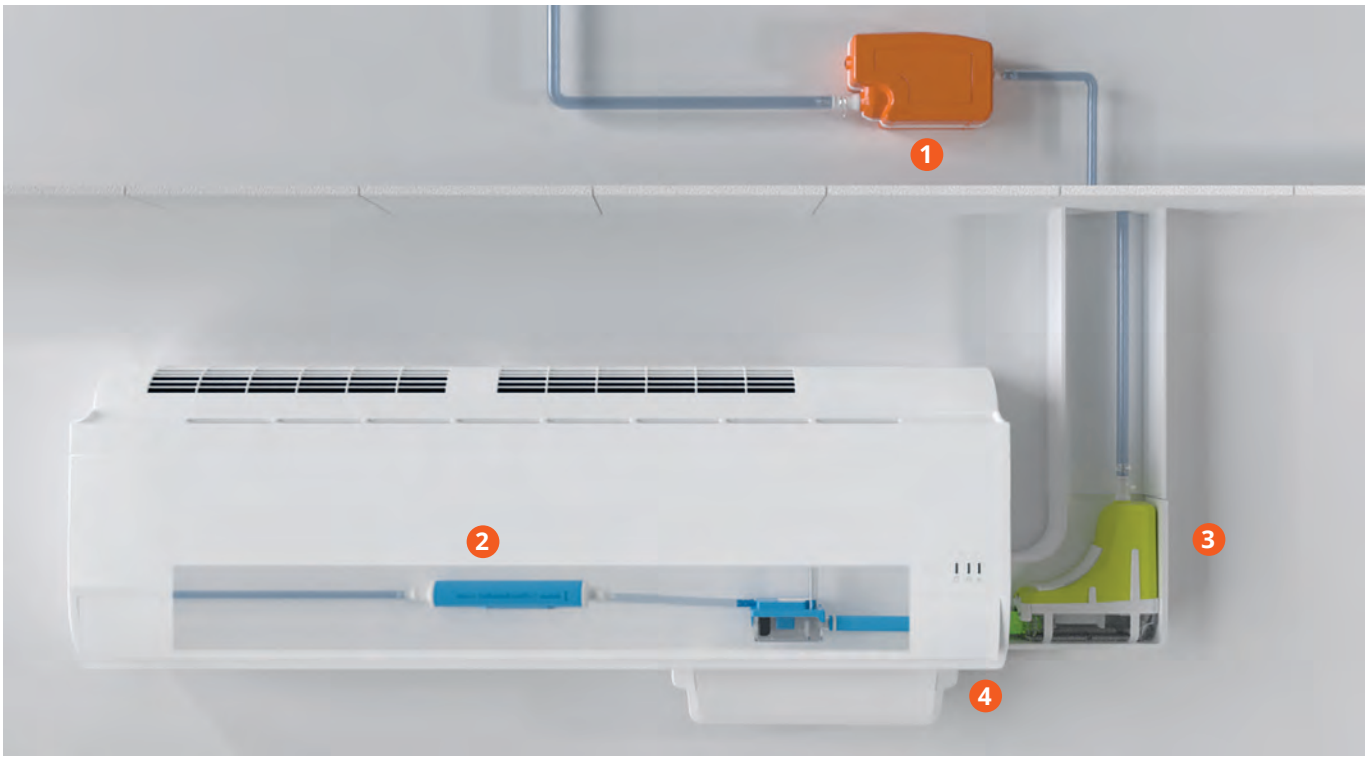

1 In the ceiling (Note: anti vibration bracket) **2** In the AC unit **3** Within the trunking **4** Under the unit

Information correct at time of going to press. Not all products are available in all regions. This document has been translated using AI and may contain inaccuracies.



Silent+ Mini Lime™

CONDENSATE REMOVAL PUMP

The new and improved 5th gen Silent+ Mini Lime – just 16dB(A) this is the quietest and most versatile of elbow pumps. Simple and flexible to install. The proven technology delivers an impressive flow rate and lower power consumption. All round maximum performance, on-demand power, near-silent operation, optimum reliability and increased energy efficiency.

- 40L/h max. flow
- 15m max. rec. head
- 16dB(A) @ 1m

Key Features

- Backwards compatible Plug & Play cable
- Fits all popular trunking systems
- Quick install – no longer need for a damper, anti-siphon
- 40L/h flow rate and up to 10 x lower power consumption

Suitability

- Up to 46kW / 157,000Btu/h
- High wall split systems
- Left or right install with range of trunking systems
- ***Perfect for...***
  Commercial and domestic use where silence is important

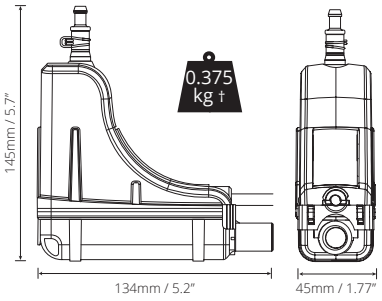

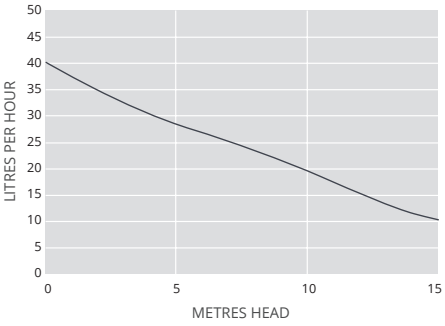

Univolt 100-250 VAC 50-60Hz	
Max. flow	40L/h @ 0m head
Max. rec. head	15m
dB(A) @ 1m	As low as 16*
Power supply	100-250 VAC, 0.18A, 2.1W, 50/60Hz
Rated	Continuous
Class	II ⧈
Max. unit output	Up to 46kW / 157000Btu/h
Max. ambient temp	40°C
Inlet/Outlet connections	Inlet o/d: Ø16mm Outlet o/d: Ø6mm
IP Protection	IP24
Safety switch	5.0A N.C. (Normally Closed)
Self priming	✓

*Assuming solid wall construction with a 2kW unit.

IN THE BOX

Silent+ Mini Lime pump (including 1.5m Plug & Play cable) • 500mm Lime green inlet hose 14mm ID • 40mm Vinyl breather tube 6mm ID • Elbow front and back • 800mm trunking front and back • Internal trunking sleeve (Slimline system only) • Gasket (Slimline, S-Ducting and Inoac systems only) • Ceiling plate • Drain connector kit • Fixing kit • Quick Start Guide

SUGGESTED ACCESSORIES

Description		Part No.
1 Amp Fuse		FP2620
Tube To Soil Stack Adaptor		FP2038
Vinyl Tube Braided 1/4" (6mm)		AX5100

SYSTEM OPTIONS

System		Colour	Part No.
Slimline	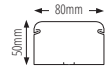	Ivory	FP3312/5
		White	FP3319/5
EuroSplit		Pure White	FP3470/5
		Signal White	FP3471/5
		Light Ivory	FP3472/5
		Anthracite	FP3473/5
		Black	FP3474/5
O-Ducting		White	FP3327/5 ‡‡
S-Ducting		White	FP3320/5 ‡
Inoac		White	FP3321/5
Silent+ Mini Lime Replacement†			FP3322/5

† Pump only – no trunking included.
‡ FP3320/5 trunking system is SpeediDuct compatible.
‡‡ FP3327/5 trunking system is Optimal compatible.
(SpeediDuct & Optimal Duct are registered trademarks of Castel Engineering).

Download manual at aspenpumps.com

Watch installation video at aspenpumps.com

Information correct at time of going to press. Not all products are available in all regions. This document has been translated using AI and may contain inaccuracies.

THE NEW SILENT+ MINI LIME

QUIETLY BRILLIANT









Simple & faster install.
No need for a damper, anti-siphon, buttons or lights.

No need for a Maxi Lime – this pump is a Mini and Maxi all-in-one.

Fits all trunking systems.
Plus, our Kwik Fix range is available in three colours (white, cream, black).

Plug & Play. Backwards compatible. Perfect for replacement installations.

Replacement pump available, alongside the complete system.

Near-silent operation. As low as 16dB(A)@1m.

Variable speed, on demand power, no-touching parts = silence.

Proven tech. Same tech as our best-selling Silent+ Mini White.
Only works when it needs to. Up to 10 x lower power consumption.

An impressive flow rate of up to 40 l/h, larger tank and head capability.

Satisfaction guaranteed. All backed with a three year guarantee.

Information correct at time of going to press. Not all products are available in all regions. This document has been translated using AI and may contain inaccuracies.



Silent+ Mini Orange™

CONDENSATE REMOVAL PUMP

The world's No.1 Orange mini pump is now better than ever. Using our proven 5th Gen Technology, the Silent+ Mini Orange boasts sound levels as low as 16dB(A)*. So quiet it eliminates the need for additional noise or vibration dampers. Capacitance sensor technology, provides intelligent, adaptive flow rates. Quietly brilliant.

- 35L/h max. flow
- 10m max. rec. head
- As low as 16dB(A)*

Key Features

- Proven 5th Gen Technology: Capacitance Sensing & Rotary Diaphragm = Silence & Power
- Low maintenance
- Plug & Play**
- 3 year warranty

Suitability

- Up to 40kW / 136,000Btu/h
- Ducted units; floor standing & chassis units; high wall split systems
- ***Perfect for...*** small commercial and residential units

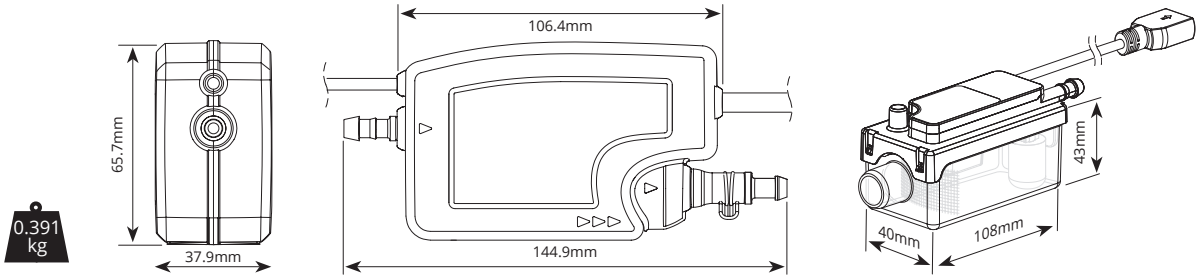

SPECIFICATIONS

Max. flow	35L/h @ 0m head
Max. rec. head	10m
Max. suction lift	1.5m
Min. dB(A) @ 1m	16dB(A)*
Power supply	100-250VAC, 0.18A, 2.4W, 50/60 Hz
Rated	Continuous
Class	II ⧈
Max. unit output	40kW / 136,000Btu/h
Max. ambient temp	40°C (104°F)
IP Protection	IP24
Inlet o/d	Ø16mm (5/8")
Outlet o/d	Ø6mm (1/4")
Safety switch	5.0 A Normally closed
Self priming	✓

*assuming solid wall construction with a 2kW unit

**not backwards compatible

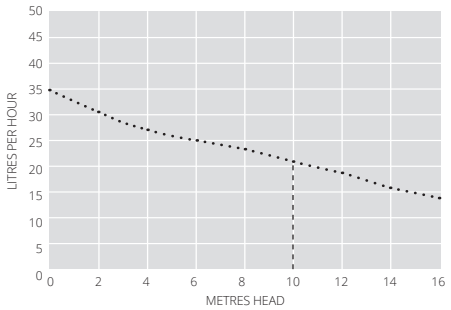

OPTIONS

Silent+ Mini Orange	FP3430

IN THE BOX

Silent+ Mini Orange 5th Gen pump • Reservoir (inc. filter and lid) • 1.5m Plug & play cable** • 1.5m clear PVC tube • 150mm clear vent hose • 220mm Orange inlet hose • Drain connector kit: straight connector and rubber elbow • Quick start guide

Download full manual at aspenpumps.com

SUGGESTED ACCESSORIES

Description		Part No.
Hose Clamp 10.1 dia. (x10)		B3340
S+ Mini Pump spare filters (x10)		FP3330
Barbed anti-siphon device		FP3336/1
Reservoir copper mesh filter (x10)		FP3460
Universal fixing bracket		FP3463
Mini Pump reservoir kit		FP3461

Information correct at time of going to press. Not all products are available in all regions. This document has been translated using AI and may contain inaccuracies.



Silent+ Mini Aqua™





CONDENSATE REMOVAL PUMP

The Silent+ Mini Aqua keeps its sleek and slender form offering unparalleled installation flexibility. It fits neatly into trunking and inside mini split units. Packed with our proven 5th Gen Technology, it's unbeatable silence – a barely audible 16dB(A)*, combined with intelligent, adaptive flow rates – further extends pump life, maximises reliability and improves energy efficiency. Quietly brilliant.

- 35L/h max. flow
- 10m max. rec. head
- As low as 16dB(A)*

Key Features

- Slim profile
- Proven 5th Gen Technology: Capacitance Sensing & Rotary Diaphragm = Silence & Power
- Low maintenance
- Plug & Play**
- 3 year warranty

Suitability

- Up to 40kW / 136,000Btu/h
- Ducted units; floor standing & chassis units; high wall mini split systems
- ***Perfect for...*** smaller commercial and domestic applications, where silence is needed

0.408 kg

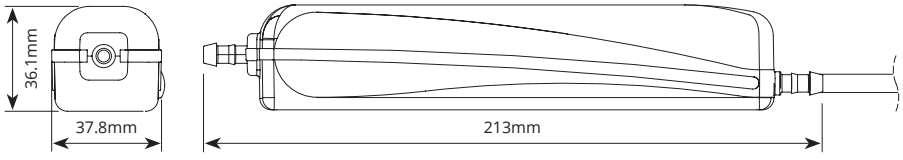

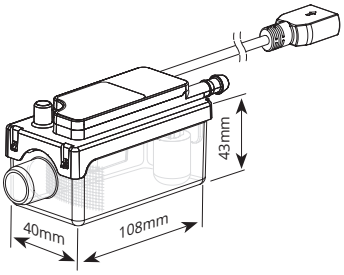

SPECIFICATIONS	
Max. flow	35L/h @ 0m head
Max. rec. head	10m
Max. suction lift	1.5m
Min. dB(A) @ 1m	16dB(A)*
Power supply	100-250VAC, 0.18A, 2.4W, 50/60 Hz
Rated	Continuous
Class	II ⧈
Max. unit output	40kW / 136,000Btu/h
Max. ambient temp	40°C (104°F)
IP Protection	IP24
Inlet o/d	Ø16mm (5/8")
Outlet o/d	Ø6mm (1/4")
Safety switch	5.0 A Normally closed
Self priming	✓

* assuming solid wall construction with a 2kW unit
** not backwards compatible

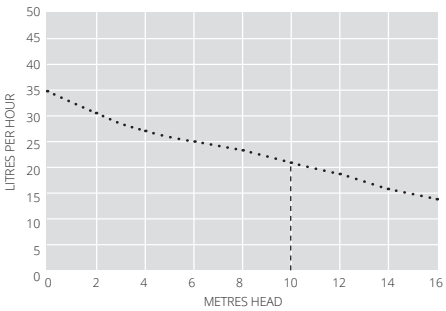

OPTIONS	
Silent+ Mini Aqua	FP3420
Silent+ Mini Aqua With Compact Reservoir	FP3420/1

Download full manual at aspenpumps.com

SUGGESTED ACCESSORIES		
Description		Part No.
Hose Clamp 10.1 dia. (x10)		B3340
S+ Mini Pump spare filters (x10)		FP3330
Barbed anti-siphon device		FP3336/1
Reservoir copper mesh filter (x10)		FP3460
Universal fixing bracket		FP3463
Mini Pump reservoir kit		FP3461

IN THE BOX

Silent+ Mini Aqua 5th Gen pump • Reservoir (inc. filter and lid) • 1.5m Plug & play cable** • 1.5m clear PVC tube • 150mm clear vent hose • 220mm blue inlet hose • Drain connector kit: straight connector and rubber elbow • Quick start guide

Information correct at time of going to press. Not all products are available in all regions. This document has been translated using AI and may contain inaccuracies.



Silent+ Mini White™

CONDENSATE REMOVAL PUMP

Incredibly quiet, easy to install and maintain, the Silent+ Mini White has been designed to fit either side of the evaporator unit. The reservoir is simple to unclip for cleaning and maintenance.

- 45L/h max. flow
- 10m max. rec. head (flow rate 23L/h)
- As low as 16dB(A) when operating

Key Features

- Ultra quiet operation
- Extra quick to fit
- Compact & discreet
- Removable reservoir

Suitability

- Up to 40kW/136,000Btu/h
- High wall mini split systems
- ***Perfect for...*** domestic environments where minimising audible noise is crucially important

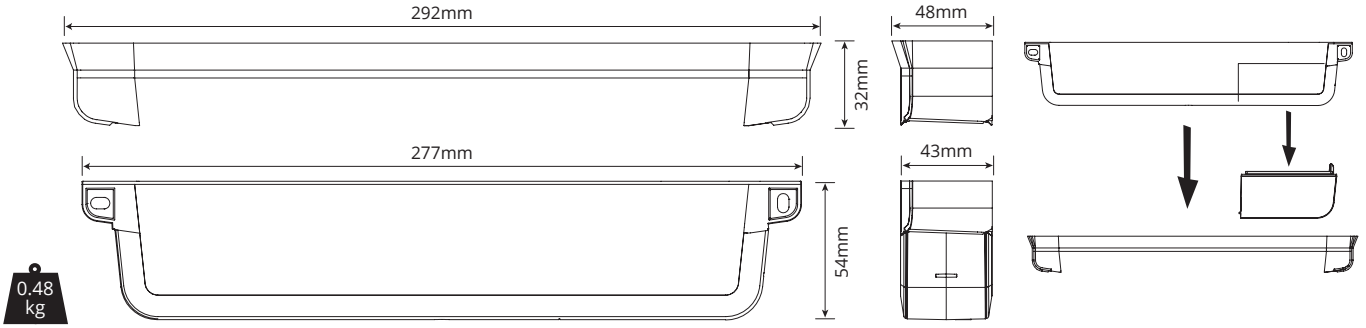

SPECIFICATIONS

Max. flow	45L/h @ 0m head
Max. rec. head	10m
Min. dB(A) @ 1m	16dB(A)
Power supply	230 VAC, 50-60 Hz, 0,18 A, 2.1 W
Rated	Continuous
Class	II ⧈
Max. unit output	40kW (136,000Btu/h)
Max. ambient temp	40°C (104°F)
IP Protection	IP24
Inlet o/d	16mm (5/8") – 26mm (1")
Outlet o/d	Ø6mm (1/4")
Safety switch	5.0 A NO & NC contacts
Thermal protection	✓
Self priming	✓

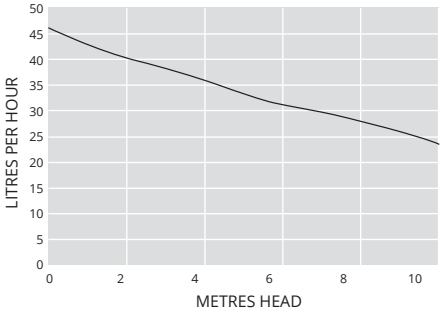

OPTIONS

Silent+ Mini White (Europe)	FP3450

SUGGESTED ACCESSORIES

Description	Part No.
1 Amp Fuse	FP2620
Tube To Soil Stack Adaptor	FP2038



IN THE BOX

Silent+ Mini White pump (incl. hard wired 1m power cable) • Fitting template • Outlet elbow • Screw caps • Spacer • Installation manual

Download manual at aspenpumps.com

Ensure ALL cleaning chemicals are flushed out of the reservoir after use.

Information correct at time of going to press. Not all products are available in all regions. This document has been translated using AI and may contain inaccuracies.

Mini Pumps

When it comes to dependable condensate removal, Aspen's Mini Pump range delivers performance you can trust. Designed to suit the majority of HVAC applications, these compact pumps are the go-to choice for installers and engineers who value reliability, ease of installation, and solid performance.



Mini Blanc



Mini Lime



Mini Aqua



Mini Orange

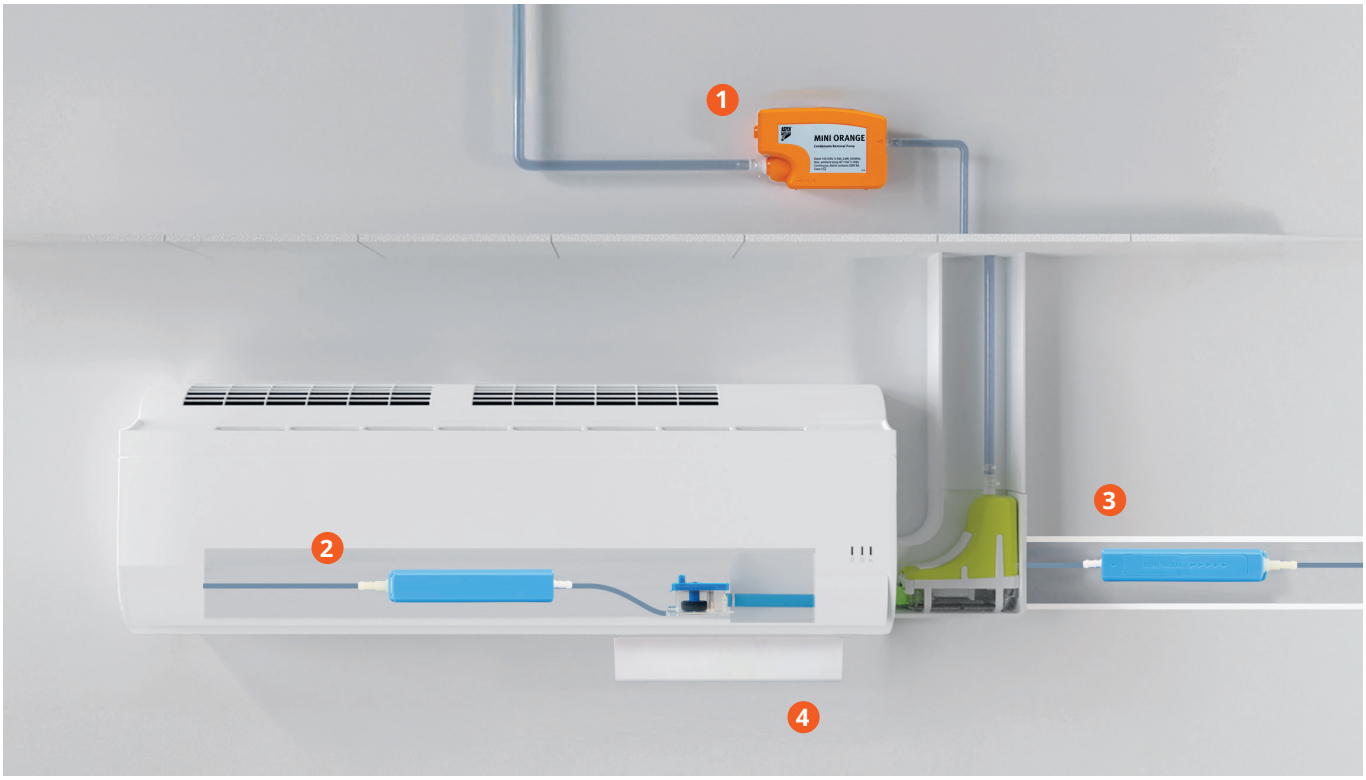

1 In the ceiling **2** In the AC unit **3** Within the trunking **4** Under the unit

Information correct at time of going to press. Not all products are available in all regions. This document has been translated using AI and may contain inaccuracies.



Mini Lime

CONDENSATE REMOVAL PUMP

The New Mini Lime is Aspen's all-in-one elbow mini pump. Complete with a 620mm length of EuroSplit trunking – less waste and better value! **Need more trunking options and the world's quietest mini pump? Please see our Silent+ Mini Lime.**

- 20L/h max. flow
- 15m max. rec. head
- 19dB(A) @ 1m

Key Features

- Plug & Play
- Fits all popular trunking systems
- Quick install
- 2 year warranty

Suitability

- Up to 26kW / 90,000Btu/h
- High wall split systems
- Left or right install
- ***Perfect for...***
  Commercial and domestic use

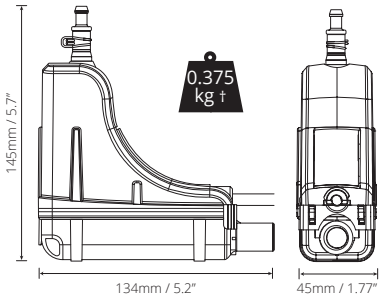

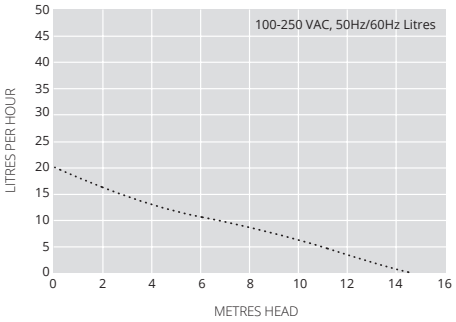

Univolt 100-250 VAC 50-60Hz	
Max. flow	20L/h @ 0m head
Max. rec. head	15m
dB(A) @ 1m	19
Power supply	100-250 VAC, 0.18A, 2.1W, 50/60Hz
Rated	Continuous
Class	II ⧈
Max. unit output	26kW (90,000Btu/h)
Max. ambient temp	40°C
Inlet/Outlet connections	Inlet o/d: Ø16mm Outlet o/d: Ø6mm
IP Protection	IP24
Safety switch	5.0A N.C. (Normally Closed)
Self priming	✓

† Pump only – no trunking included.

SYSTEM OPTIONS			
System		Colour	Part No.
EuroSplit (620mm length)		○ Pure White	FP3580
		○ Signal White	FP3581
		○ Light Ivory	FP3582
		● Anthracite	FP3583
		● Black	FP3584
Ersatz für Mini Lime†			FP3579

For further trunking options, see our Silent+ Mini Lime range.

SPARES		
Description		Part No.
Hose Clamp 10.1 dia. (x10)		B3340
S+ Mini Pump spare filters (x10)		FP3330
Barbed anti-siphon device		FP3336/1
Mini Lime spares kit		FP3328

IN THE BOX

Mini Lime pump (including 1.5m Plug & Play cable) • 220mm inlet hose 14mm ID • 40mm Vinyl breather tube 6mm ID • Elbow front and back • 620mm trunking front and back • Ceiling plate • Drain connector kit • Fixing kit • Quick start guide

Download full manual at aspenpumps.com

Watch installation video at aspenpumps.com

Information correct at time of going to press. Not all products are available in all regions. This document has been translated using AI and may contain inaccuracies.



Mini Aqua

CONDENSATE REMOVAL PUMP

Ultra slim. Ultra reliable. The new compact Mini Aqua installs quickly and easily into any unit, with minimal maintenance and maximum versatility. Paired with our compact reservoir, it's one of the smallest condensate pumps on the market – no compromise, no fuss. **Looking for an even quieter pump? Choose Silent+ – the world's quietest range of mini pumps.**

- 20L/h max. flow
- 10m max. rec. head
- 19dB(A) @ 1m*

Key Features

- **New** ultra slim design!
- **New** compact reservoir!
- High performance
- Plug & Play

Suitability

- Up to 26kW / 90,000Btu/h
- High wall mini split systems; Ducted units; Floor standing & Chassis units
- ***Perfect for...*** installing directly inside the unit

0.18 kg †

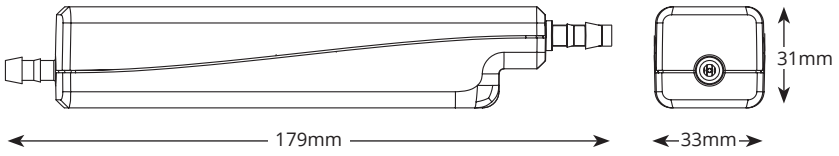

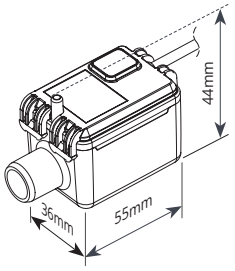

SPECIFICATIONS

Max. flow	20L/h @ 0m head
Max. rec. head	10m
Max. suction lift	1.5m
dB(A) @ 1m	19dB(A)*
Power supply	100-250VAC, 0.18A, 2.4W, 50.60Hz (provisional)
Rated	Continuous
Class	II ⧈
Max. unit output	26kW (90,000 Btu/h)
Max. ambient temp	40°C (104°F)
Discharge tube	6mm ID
IP Protection	IP24
Safety switch	5.0A Normally closed
Self priming	✓

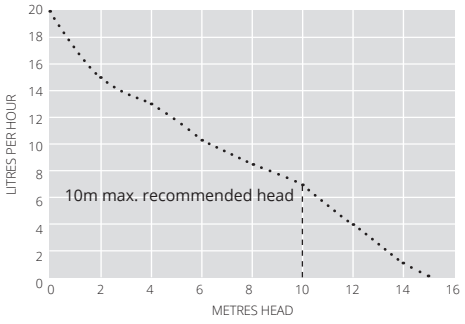

SUGGESTED ACCESSORIES

Description	Part No.
Hose Clamp 10.1 dia. (x10)	B3340
Compact reservoir filter spares (x10)	FP3618
Barbed anti-siphon device	FP3336/1

OPTIONS

Mini Aqua with Compact Reservoir	FP3589

Download manual at aspenpumps.com

Installation video at aspenpumps.com

IN THE BOX

Mini Aqua pump • 1.5m Plug & Play power cable • Compact reservoir (inc. filter & lid) • 150mm Vinyl breather tube • 1.5m Suction tube 6mm ID • 220mm Blue inlet hose 14mm ID • Drain connector kit • Quick Start Guide

Information correct at time of going to press. Not all products are available in all regions. This document has been translated using AI and may contain inaccuracies.



Mini Orange

CONDENSATE REMOVAL PUMP

The Mini Orange – Aspen as you know it. Quiet, reliable, and built for performance. Designed to fit in ceiling voids or spaces away from the unit, it stays out of sight and out of mind. A trusted all-rounder for standard HVAC applications, backed by a 2-year warranty. **If you're looking for the world's quietest mini pumps, try our Silent+ range, at only 16dB(A).**

- 20L/h max. flow
- 10m max. rec. head
- 19dB(A) @ 1m

Key Features

- Low maintenance
- Plug & play
- 2 year warranty

Suitability

- Up to 26kW / 90,000Btu/h
- Ducted units; floor standing & chassis units; high wall split systems
- ***Perfect for...*** small commercial and residential units

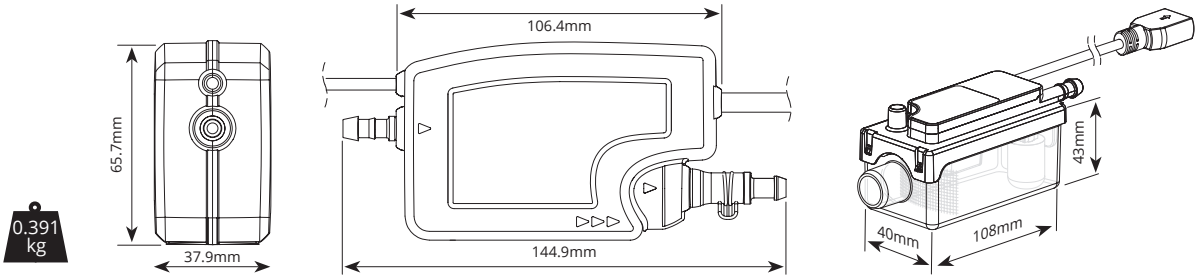

100V-250VAC @ 50Hz/60Hz	
Max. flow	20L/h @ 0m head
Max. rec. head	10m
Max. suction lift	1.5m
Min. dB(A) @ 1m	19dB(A)
Power supply	100-250VAC, 0.18A, 2.4W, 50/60 Hz
Rated	Continuous
Class	II ⧈
Max. unit output	26kW (90,000Btu/h)
Max. ambient temp	40°C (104°F)
IP Protection	IP24
Inlet o/d	Ø16mm (5/8")
Outlet o/d	Ø6mm (1/4")
Safety switch	5.0 A Normally closed
Self priming	✓

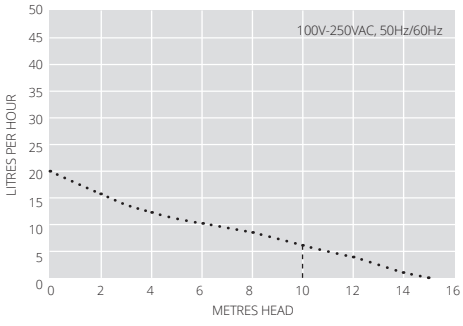

OPTIONS	
Mini Orange	FP3577

IN THE BOX

Mini Orange pump • Reservoir (inc. filter and lid) • Wall fixing pad • 1.5m Clear PVC tube • 220mm inlet hose • 150mm Clear vent hose • Drain connector kit: straight connector and rubber elbow • Quick Start Guide

SPARES		
Description		Part No.
Hose Clamp 10.1 dia. (x10)		B3340
S+ Mini Pump spare filters (x10)		FP3330
Barbed anti-siphon device		FP3336/1
Reservoir copper mesh filter (x10)		FP3460
Universal fixing bracket		FP3463
Mini Pump reservoir kit		FP3461

Download full manual at aspenpumps.com

Watch installation video at aspenpumps.com

Information correct at time of going to press. Not all products are available in all regions. This document has been translated using AI and may contain inaccuracies.



Mini Blanc™

CONDENSATE REMOVAL PUMP

The Mini Blanc is all about neat finishes and easy installs. Stylish and powerful, it mounts directly beneath wall units making it ideal for retrofit installations where aesthetics matter. Backed by Aspen reliability and a 2-year warranty, it's a clean choice for clean lines. **If you're looking for state-of-the-art of pump technology, upgrade to our Silent+ range.**

- 20L/h max. flow
- 10m max. rec. head (flow rate 4L/h)
- 19dB(A) @ 1m

Key Features

- Fast install
- Easy maintenance access
- Removable reservoir
- Quiet operation
- Elegant and stylish casing
- 2 year warranty

Suitability

- Up to 26kW / 90,000Btu/h
- High wall split systems
- ***Perfect for...*** Domestic and commercial use – where easy maintenance is key

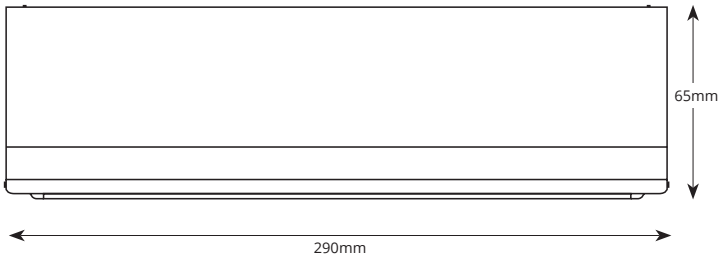

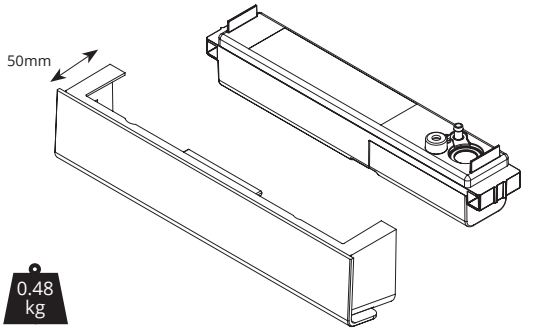

100V-250VAC @ 50Hz/60Hz	
Max. flow	20L/h @ 0m head
Max. rec. head	10m
dB(A) @ 1m	19dB(A)
Power supply	230 VAC,50.60Hz, 0.16A / 5W
Rated	Continuous
Class	II ⧈
Max. unit output	26kW (90,000Btu/h)
Max. water temp	40°C (104°F)
Inlet/outlet	20mm in 6mm out
IP Protection	IP24
Safety switch	5A Normally closed
Self priming	✓

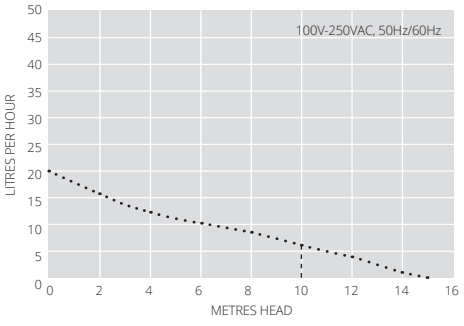

OPTIONS	
Mini Blanc	FP3578

IN THE BOX

Mini Blanc pump, Hard wired 1.5m power cable
• Fitting template (part of box) • Quick start guide

SPARES		
Description		Part No.
Mini Blanc 4.5 Foam Filter Spares (x10)		FP3587
Barbed anti-siphon device		FP3336/1
Reservoir copper mesh filter (x10)		FP3460

Download full manual at aspenpumps.com

Information correct at time of going to press. Not all products are available in all regions. This document has been translated using AI and may contain inaccuracies.

Peristaltic pumps

Our peristaltic pump range is the 'best of the best'. Offering unrivalled remote install possibilities, they can be placed up to 3 metres from the AC unit without affecting performance. Perfect for spaces which require unobtrusive maintenance access (eg hotels, hospitals). Handling dirty water and with the added benefit that they can run dry, our peristaltic pump range is ideal for commercial remote applications.



Ultra Black Air



Ultra Black +



1 Remote access with minimal disturbance. Pump placed remotely from AC unit eg. above ceiling in hallway of hotel.

Information correct at time of going to press. Not all products are available in all regions. This document has been translated using AI and may contain inaccuracies.



Ultra Black Air

CONDENSATE REMOVAL PUMP

The new Ultra Black Air offers outstanding reliability with an industry first 5 year warranty*. Built upon stepper motor technology and software control, this version offers user programmable speed control to minimise audible noise and tube wear.

15 L/h max. flow

12m max. head
(Flow rate 15 l/h)

21 dB(A) @ 1 m

1.12 kg

Key Features

- 5 year warranty*
- Configurable motor speed
- Flexible Installation with outstanding lift
- Easy to install with Patented mounting technology

Suitability

- Up to 20 kW (68 000Btu/h)
- High wall split systems; Ducted units; Floor standing & Chassis units
- ***Perfect for...*** hotel bedrooms and other remote install locations

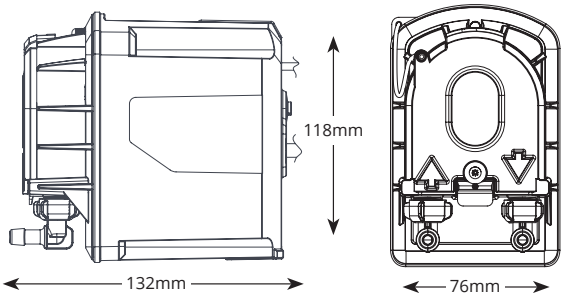

PATENT DESIGN
PERISTALTIC PUMPS & FIXING BRACKET

@ 230 VAC 50Hz	
Max. flow	15 L/h @ 12m head
Max. head	12m
Max. suction lift	3m
dB(A) @1m	21dB(A)
Power supply	110-230 VAC, 0.2A, 50/60Hz
Rated	Continuously
Class	II ⧈
Max. unit output	20kW (68 000 Btu/h)
Max. water output	40°C (104°F)
Inlet/Outlet	6mm ID
IP Protection	IP24
Safety Switch	5A NC relay
Self priming	✓

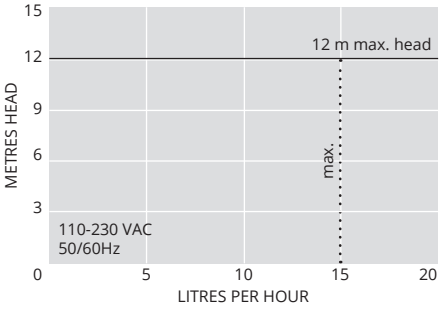

OPTIONS	
Ultra Black Air	FP3390

SUGGESTED ACCESSORIES		
Description		Part No.
Peri Spare Tube Kit		FP3394
1 Amp Fuse		FP2620
Tube Soil Stack Adaptor		FP2038

IN THE BOX

Ultra Black Air Condensate Removal Pump • 3m Plug & Play Power/Sensor Cable • Wall Mounted Bracket • Fixing Kit • Installation Manual

Download manual at aspenpumps.com

Information correct at time of going to press. Not all products are available in all regions. This document has been translated using AI and may contain inaccuracies.





Ultra Black +

FLOAT BASED CONDENSATE REMOVAL PUMP

The new Ultra Black + pump offers outstanding reliability with an industry first 5 year warranty*. Built upon stepper motor technology and software control, this version offers smart pumping technology similar to the latest mini pumps, always minimising audible noise and tube wear.

- 15L/h max. flow
- 12m max. head
- 21 dB(A) @ 1m

1.12 kg

Key Features

- 5 year warranty*
- Configurable motor speed
- Flexible Installation with outstanding lift
- Easy to install with Patented mounting technology

Suitability

- Up to 20 kW (68 000Btu/h)
- High wall split systems; Ducted units; Floor standing & Chassis units
- ***Perfect for...*** hotel bedrooms and other remote install locations

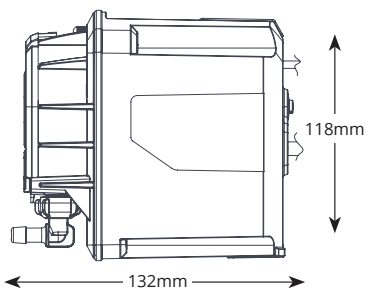

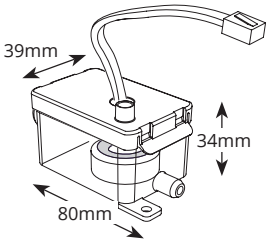

PATENT DESIGN
PERISTALTIC PUMPS & FIXING BRACKET

@ 230 VAC 50Hz	
Max. flow	15 L/h @ 12m head
Max. head	12m
Max. suction lift	3m
dB(A) @1m	21dB(A)
Power supply	110-230 VAC, 0.2A, 50/60Hz
Rated	Continuously
Class	II ⧈
Max. unit output	20kW (68 000 Btu/h)
Max. water output	40°C (104°F)
Inlet/Outlet	6mm ID
IP Protection	IP24
Safety Switch	5A NC relay
Self priming	✓

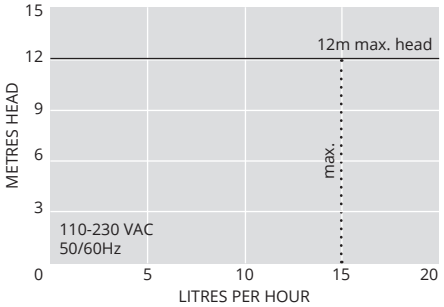

OPTIONS	
Ultra Black +	FP3391

SUGGESTED ACCESSORIES		
Description		Part No.
Peri Spare Tube Kit		FP3394
1 Amp Fuse		FP2620
Tube Soil Stack Adaptor		FP2038

IN THE BOX

Ultra Black + Condensate Removal Pump • 3m Plug & Play Power/Sensor Cable • Wall Mounted Bracket • Fixing Kit • Installation Manual

Download manual at aspenpumps.com

Information correct at time of going to press. Not all products are available in all regions. This document has been translated using AI and may contain inaccuracies.

Tank pumps

Our tank pump range is designed with you, the installer in mind.
Easy to install and maintain, with features including easy clean tank, Plug & Play, twist & click non return valve and built in spirit level. When time is precious, Aspen tank pumps are installer friendly with unsurpassed performance as standard.



Mini Tank



Max Hi-Flow



Hi-Lift 1L & 2L



Heavy Duty 6 & 10



Hot Water Pumps

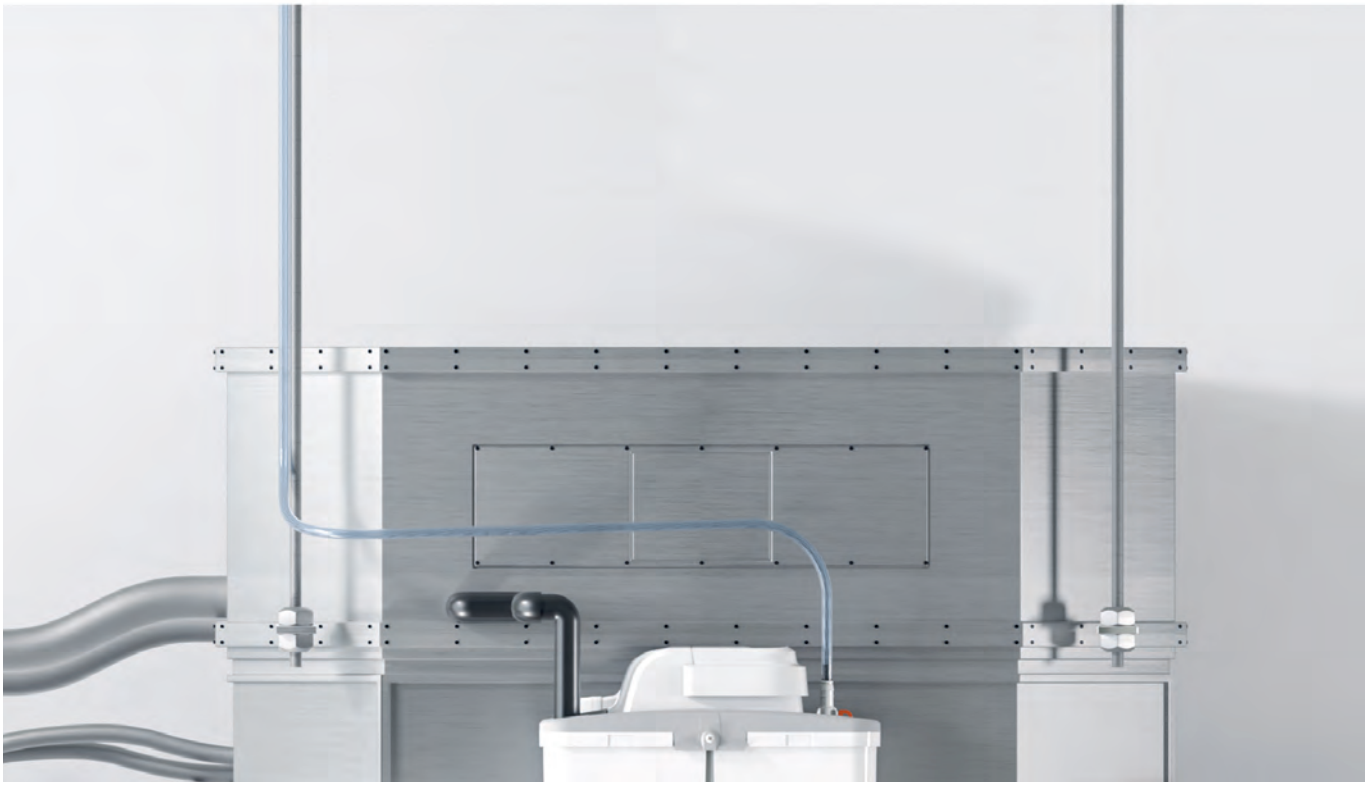

Max Hi-Flow screw mounted to cassette unit

Information correct at time of going to press. Not all products are available in all regions. This document has been translated using AI and may contain inaccuracies.



Mini Tank

CONDENSATE REMOVAL PUMP

The new and improved Mini Tank pump can be wall mounted, floor mounted, in-pan or suspended on M8 / M10 rod. Using piston technology this is a compact, powerful and multi functional tank pump.

35L/h max. flow

15m max. rec. head (flow rate 10L/h)

Key Features

- Four ways to install
- Compact & discreet
- Can be located in drain pan
- Easy maintenance

Suitability

- Up to 46kW (157,000 Btu/h)
- Ducted units; Cassette units
- ***Perfect for...*** Installation versatility

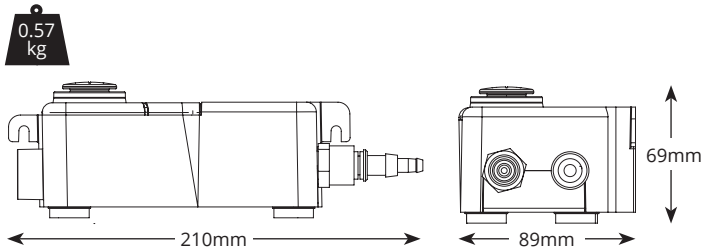

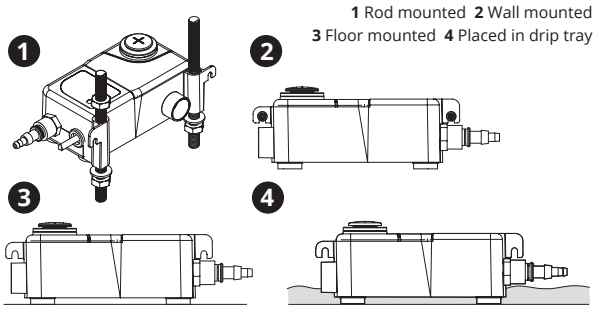

@ 230 VAC 50Hz	
Max. flow	35L/h @ 0m head
Max. rec. head	15m
Tank capacity	0.24L
dB(A) @ 1m	35dB(A)
Power supply	230 VAC, 50-60Hz, 0.1A
Rated	Non continuous
Class	II
Max. unit output	46kW (157,000 Btu/h)
Max. water temp	40°C (104°F)
Inlets	x2 22mm, 12mm, 27mm
Outlets	6mm & 10mm
IP Protection	IP65
Safety switch	3.0A Normally closed
Thermal protection	✓
Fully potted	✓
Self priming	n/a

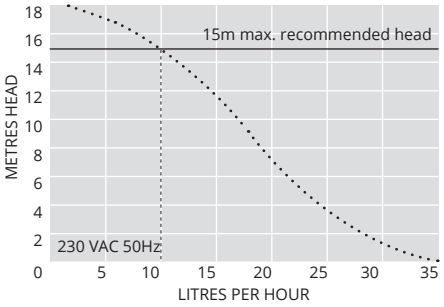

SUGGESTED ACCESSORIES

Description		Part No.
Tank pump connector 16mm–21mm		FP2011
Tube To Soil Stack Adaptor		FP2038
Vinyl Tube Braided 1/4" (6mm)		AX5100

OPTIONS

Mini Tank	FP1056/2

IN THE BOX

Mini Tank pump (including hard wired 1m power cable) • x2 Rubber adaptors (21.5mm & 31mm) • Anti siphon device • Fixing kit • Install manual

Download manual at aspenpumps.com

Watch installation video at aspenpumps.com

Information correct at time of going to press. Not all products are available in all regions. This document has been translated using AI and may contain inaccuracies.



The lowest dB(A) & best IP rating (IP24) of any tank pump, the Max Hi-Flow is the quietest and best pump in its class.

Information correct at time of going to press. Not all products are available in all regions. This document has been translated using AI and may contain inaccuracies.



MAX Hi-Flow

CONDENSATE REMOVAL PUMP

The best in class Max Hi-Flow tank pump carries on the Aspen Pumps tradition of build quality & high performance. With the lowest dB(A) rating & best IP rating (IP24 splash proof) of any tank pump, the Max Hi-Flow is the quietest & best pump in its class.

550 L/h max. flow

5m max. rec. head (flow rate 55L/h)

Key Features

- IP24 – Splash proof
- Easy access tank
- Built in spirit level
- Plug & Play

Suitability

- Up to 733kW (2.5m Btu/h)
- Ducted units; Floor standing & Chassis units; Cassette units
- ***Perfect for...*** Large commercial units

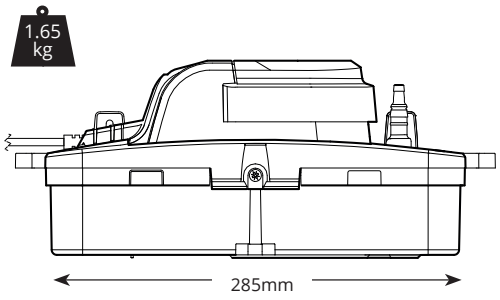

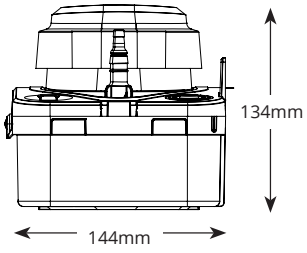

Non-return valve can be cut from 6mm to 10mm (see graphs below)

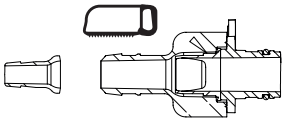

@ 230 VAC 50HZ	
Max. flow	550L/h @ 0m head
Max. rec. head	5m
Tank capacity	1,7L
dB(A)@1m	44dB(A)
Power supply	230 VAC, 0.8A, 50Hz
Rated	Non Continuous
Class	I
Max. unit output	733kW (2.5m Btu/h)
Max. water temp	40°C (104°F)
Inlets	x4 21–27mm
Outlets	6mm & 10mm
IP Protection	IP24
Safety switch	3A Normally closed
Thermal protection	✓
Fully potted	n/a
Self priming	n/a

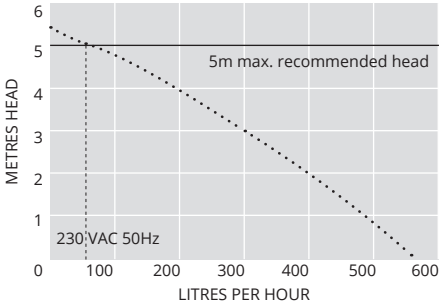

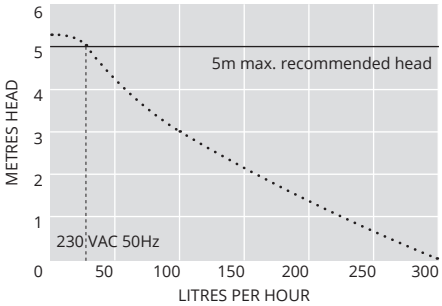

OPTIONS	
Max Hi-Flow	FP3349

SUGGESTED ACCESSORIES		
Description		Part No.
Rubber adaptor		FP2013
Rigid pipe 15mm / 3/4"		B7501
Hose to waste		FP2038
Max Hi-Flow Insulation Sleeve		AX2500

IN THE BOX

Max Hi-Flow tank pump • Plug & Play power cable • Fixing kit incl. rod mount and wall mount clips • Install manual

Download manual at aspenpumps.com

Watch installation video at aspenpumps.com

Information correct at time of going to press. Not all products are available in all regions. This document has been translated using AI and may contain inaccuracies.



Hi-Lift 1L & 2L

CONDENSATE REMOVAL PUMP

The world's only persitaltic tank pump offers unsurpassed high head and unmatched reliability.

11L/h max. flow

12m max. head (flow rate 11L/h)

Key Features

- High head
- Easy fit & maintenance
- Easy access clean tray
- Built in spirit level

Suitability

- Up to 14kW (47,000 Btu/h)
- Ducted units; Floor standing & Chassis units; Cassette units; Refrigerated units/cold store
- ***Perfect for...*** High head applications

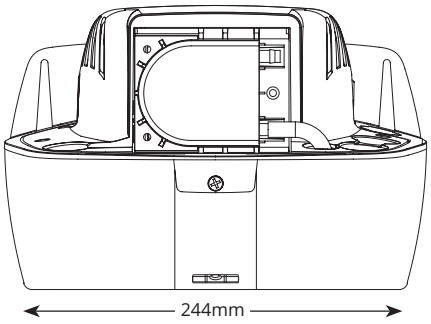

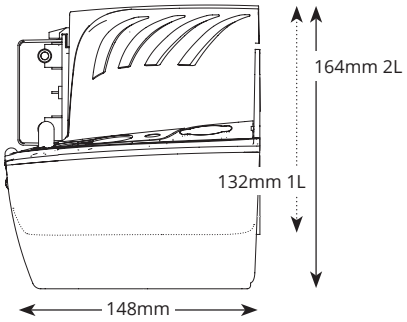

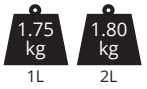

@ 230 VAC 50Hz	
Max. flow	11L/h @ 0m head
Max. head.	12m
Tank capacity	1L & 2L
dB(A) @1m	51dB(A)
Power supply	230 VAC, 50-60Hz, 0.4A
Rated	Continuously
Class	I
Max. unit output	14kW (47,000 Btu/h)
Max. water output	40°C (104°F)
Inlet/Outlet	3x 25mm in, 6mm out
IP Protection	IP20
Safety Switch	3.0A Normally closed
Thermal protection	✓
Fully potted	n/a
Self priming	n/a

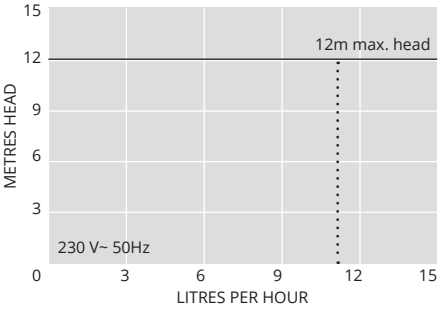

SUGGESTED ACCESSORIES

Description		Part No.
Tank pump connector 16mm–21mm		FP2011
Tube To Soil Stack Adaptor		FP2038
Vinyl Tube Braided 1/4" (6mm)		AX5110

OPTIONS

Hi-Lift 1L	FP2099/2
Hi-Lift 2L	FP2071/2

IN THE BOX

Hi-lift 1L or 2L pump • 2m Plug & Play power cable • Fixing kit • Install manual

Download manual at aspenpumps.com

Information correct at time of going to press. Not all products are available in all regions. This document has been translated using AI and may contain inaccuracies.



Heavy Duty 6 & 10

CONDENSATE REMOVAL PUMP

The Heavy Duty condensate removal pump is designed for high-demand HVAC systems, handling large condensate loads with quiet, reliable operation. Built to withstand the toughest commercial and industrial environments. These pumps are easy to install and combines power, reliability and durability.

HD6: Max. flow 900 l/h
HD10: Max. flow 1070 l/h

HD6: 6m max. rec. head (flow rate 180L/h)
HD10: 9m max. rec. head (flow rate 100L/h)

Key Features

- High flow rate
- Non return valve
- Easy installation
- 4 litre tank capacity
- High level safety switch

Suitability

- HD6: Up to 1200 kW (4m Btu/h)
  HD10: Up to 1460 kW (4.9m Btu/h)
- Dehumidifiers; Air handling units (AHUs)
- ***Perfect for...*** Large volumes of water

5.2 kg

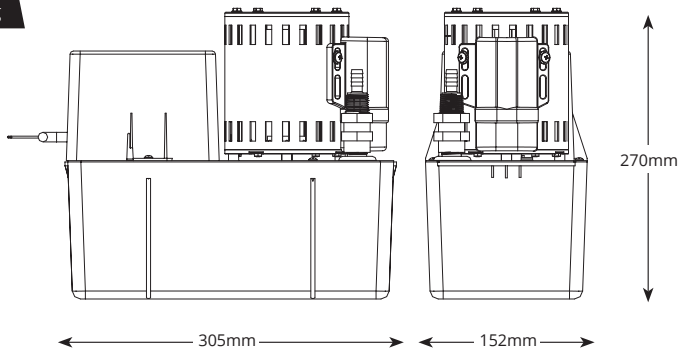



Heavy Duty 6

Heavy Duty 10

HEAVY DUTY 6 & 10 @ 230 VAC 50Hz	
Max. flow	HD6: 900 L/h, HD10: 1070 L/h
Max. rec. head	HD6: 6m, HD10: 9 m
Tank capacity	4L
Sound level@1m	HD6: 64dB(A), HD10: 64dB(A)
Power supply	HD6: 230 VAC, 50Hz, 1.1A HD10: 230 VAC, 50Hz, 1.1A
Rated	HD6: Continuous HD10: Continuous
Class	I Appliance
Max. unit output	HD6: 1200kW (4m Btu/h) HD10: 1460kW (4.9m Btu/h)
Max. ambient temp	40°C (104°F)
Max. water temp	40°C (104°F)
Inlet/Outlet	40mm in, 10mm out
IP Protection	IP20
Safety Switch	5.0A Normally closed

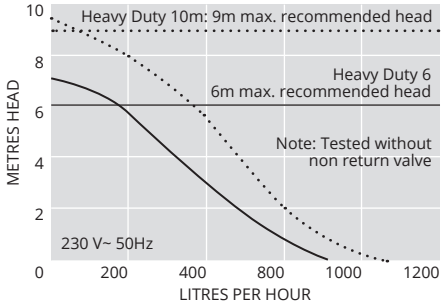

SUGGESTED ACCESSORIES		
Description		Part No.
Rubber Adaptors 3/4" (19mm) - 1 1/2" (38mm		FP2007
Tube to Soil Stack Adaptor		FP2038
Vinyl Tube Braided 3/8" (10 mm)		AX5101

OPTIONS	
Heavy Duty 6	FP2074/3
Heavy Duty 10	FP2066/3

IN THE BOX

Heavy Duty 6 or 10 pump • Hard wired 2m power cable • Install manual

Dowload manual at aspenpumps.com

Information correct at time of going to press. Not all products are available in all regions. This document has been translated using AI and may contain inaccuracies.

Hot Water Economy



CONDENSATE REMOVAL PUMP

The Hot Water Economy pump ensures efficient, quiet operation at high temperatures, handling demanding applications with ease. Built to withstand water temperatures up to 100°C, it's ideal for industrial and commercial air handling units.

900L/h max. flow

6m max. rec. head (flow rate 280L/h)

Key Features

- High performance
- Handles 100°C water
- High level safety switch
- 40mm inlet

Suitability

- Up to 1200kW / 4m Btu/h
- Humidifiers; refrigeration; air handling units (AHUs)
- ***Perfect for...*** Humidifiers



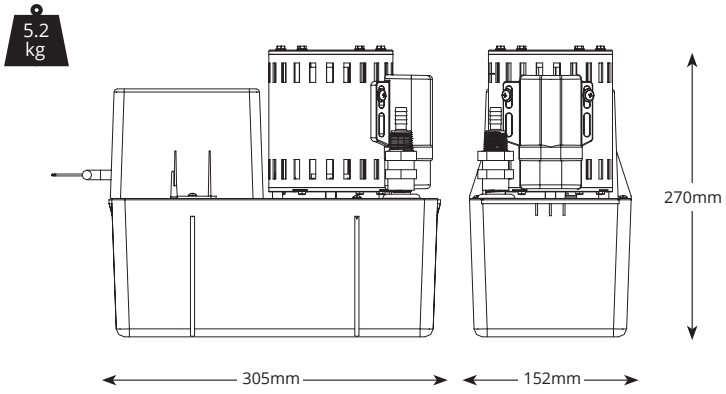

HOT WATER ECONOMY @ 230 VAC 50Hz	
Max. flow	900L/h
Max. rec. head	6m
Tank capacity	4L
Sound level@1m	64dB(A)
Power supply	230 VAC 50/60Hz 1.1A
Rated	Continuous
Class	I appliance
Max. ambient temp	40°C / 104°F
Max. water temp	100°C / 212°F
Inlet/outlet	40mm in,10mm out
IP Protection	IP20
Safety switch	5.0A Normally closed

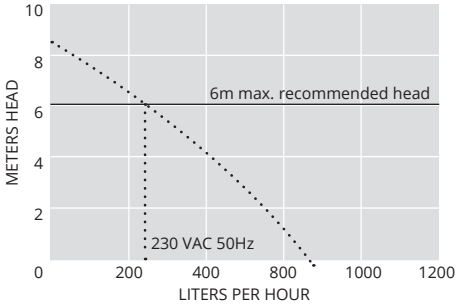

SUGGESTED ACCESSORIES	
Description	Part No.
Rubber Adaptor 3/4" (19mm) – 1 1/2" (38mm)	FP2007
Tube To Soil Stack Adaptor	FP2038
Vinyl Tube Braided 3/8" (10mm)	AX5111

HOT WATER ECONOMY OPTIONS	
Hot Water Economy	FP2092/3

IN THE BOX

Hot Water Economy Pump • Hard wired 2m power cable • Install manual

Download manual at aspenpumps.com

Information correct at time of going to press. Not all products are available in all regions. This document has been translated using AI and may contain inaccuracies.

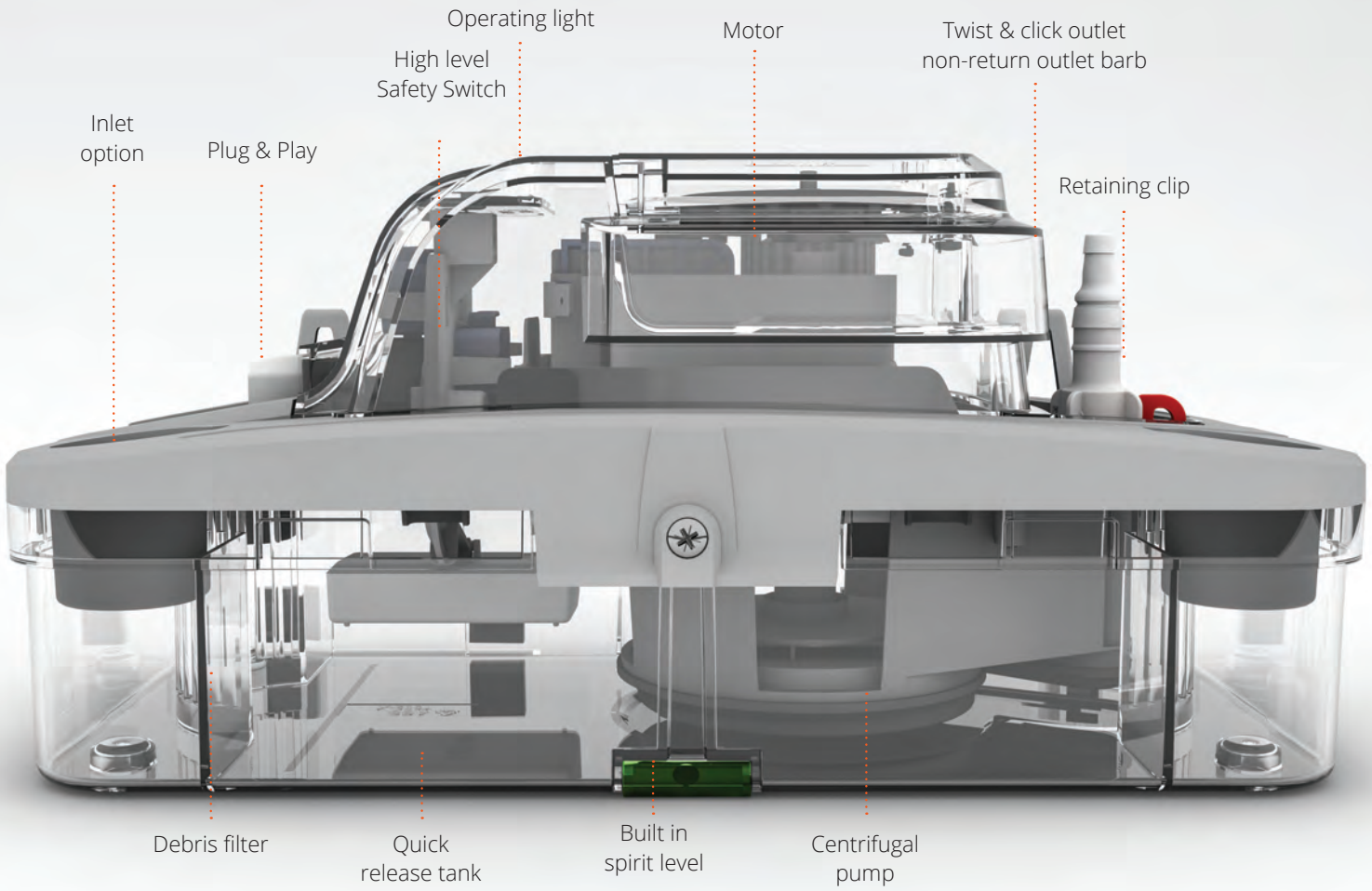

THE PROFESSIONAL WAY

So why should you choose a condensate pump? Traditionally, removing condensate water from an air conditioning unit is an inflexible and often unattractive challenge.

Installation

We understand that flexibility is key when considering your installation. Gravity drainage can often bring limitations on placement of the unit – indoor or outdoor. Condensate removal pumps allow optimum positioning and aesthetics in any installation, without losing out on efficiency or performance. Aspen Pumps give ultimate installation flexibility whatever the application.

The only option

Sometimes gravity drainage just isn't an option. Removal of condensate water in spaces such as basements, shallow ceiling voids and glass buildings never need to be a problem again. Maintenance is easy, and with a wide range of pumps to choose from, service, relocation or replacement is stress-free. As engineers, we understand that your time is precious, so we take the time to get it right for you.

A professional install

Condensate removal pumps ensure a professional, aesthetically pleasing installation every time. With easy access for maintenance, a pump ensures that air conditioning units are placed where requested with no unsightly pipework. The condensate water can be effectively managed to the relevant source such as a soil stack or grey water tank, ensuring a professional finish everytime.

Information correct at time of going to press. Not all products are available in all regions. This document has been translated using AI and may contain inaccuracies.

Supermarket Pumps

Designed for retail chiller cabinets, this range of pumps is extremely easy to install and maintain. Placed directly below the refrigeration unit they remove water during the defrost cycle. The Hi Capacity11L, Compact 4L ERRP & Low Profile Cold Cabinet both feature a unique debris filter, whilst the Macerator features a filter blade to stop the pumps from clogging with food debris.



Hi Capacity 11L ERRP



Compact 4L ERRP



Low Profile Cold Cabinet



Macerator 4L



All our refrigeration pumps simply fit beneath the refrigeration unit

Information correct at time of going to press. Not all products are available in all regions. This document has been translated using AI and may contain inaccuracies.

RETRO-FIT CONNECTIVITY*
Every unit. Total visibility.

Modbus: FP3555



High Capacity 11L ERRP

CONDENSATE REMOVAL PUMP

Our High Capacity 11L Economy Retail Refrigeration Pump has a large tank size, yet with same low profile as our Compact 4L – just 75mm! Meeting today's demands of modern refrigeration units. Effectively pumping away defrost and contaminated water.

230 L/h max. flow

35m max. head

Key Features

- Only 75mm height
- 2 stage filter to catch debris and prevent spread and growth of biofilm
- Low voltage at point of use
- Plug & Play

Suitability

- Refrigeration units; cold store cabinets
- ***Perfect for...***
  Multiple refrigeration units



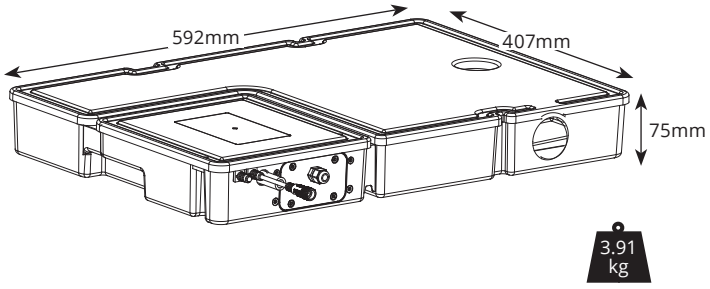

@ 230 VAC 50Hz	
Max. flow	230 L/h @ 0 head
Max. rec. head	35m
Tank capacity	11.1L
Sound level @ 1m	60 dB(A)
Power supply Input:	100~240V AC 50/60Hz
Rated	Non continuous
Class	II appliance ⧈
Max. ambient temp.	40°C / 104°F
Inlet/Outlet	40mm in, 10mm out
IP Protection	IPX4
Safety Switch	3A NC/NO
Thermal protection	✓
Flammable refrigerant compatibility	Designed to minimise spark risk
Equipment communication	Modbus RTU (option extra: FP3555)

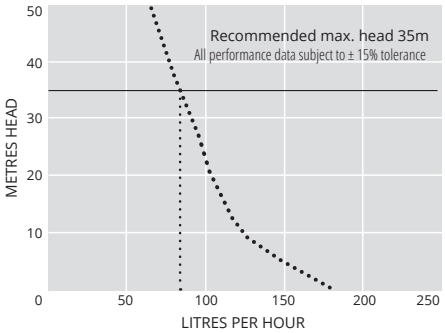

SUGGESTED ACCESSORIES		
Description		Part No.
Vinyl Tube Braided 3/8" (10 mm)		AX5101
Jallystrips		S010371

OPTIONS	
Side inlet	FP3552
Top inlet	FP3553

Download manual at aspenpumps.com

IN THE BOX

ERRP pump • 2m Plug & Play power cable • 11/2" BSP connector (for 40mm ID waste pipe) • Install manual

Information correct at time of going to press. Not all products are available in all regions. This document has been translated using AI and may contain inaccuracies.

RETRO-FIT CONNECTIVITY*
Every unit. Total visibility.

Modbus: FP3555



Compact 4L ERRP

CONDENSATE REMOVAL PUMP

Our Compact 4L Economy Retail Refrigeration Pump is designed exclusively to fit underneath retail refrigeration cabinets allowing for the removal of defrost and contaminated water.

190L/h max. flow

35m max. head

Key Features

- Lightweight & slim
- Low voltage at point of use
- 2-stage filter to prevent growth and spread of biofilm
- Plug & Play

Suitability

- Refrigeration units; cold store cabinets
- ***Perfect for...*** Single & multiple refrigeration units



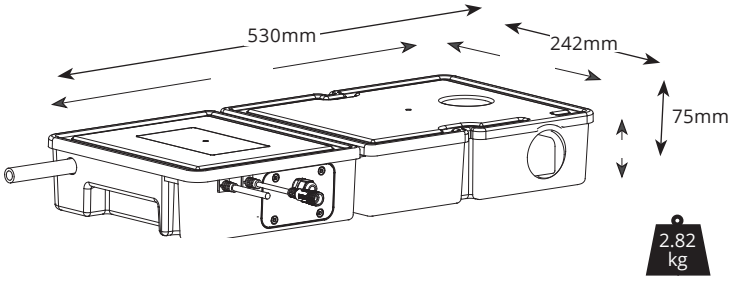

@ 230 VAC 50Hz	
Max. flow	190 L/h @ 0 head
Max. rec. head	35m
Tank capacity	4.2L
Sound level @ 1m	60 dB(A)
Power supply Input:	100~240V AC 50/60Hz
Rated	Non continuous
Class	II appliance ⧈
Max. ambient temp.	40°C / 104°F
Inlet/Outlet	40mm in, 10mm out
IP Protection	IPX4
Safety Switch	3A NC/NO
Thermal protection	✓
Flammable refrigerant compatibility	Designed to minimise spark risk
Equipment communication	Modbus RTU (option extra: FP3555)

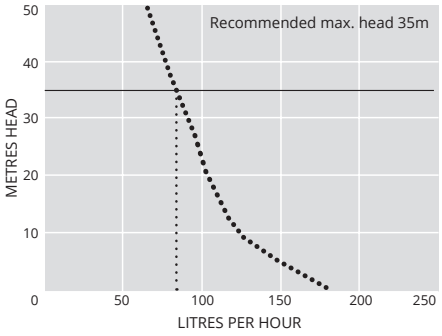

OPTIONS	
Side inlet	FP3550
Top inlet	FP3551

Download manual at aspenpumps.com

SUGGESTED ACCESSORIES		
Description		Part No.
Vinyl Tube Braided 3/8" (10 mm)		AX5101
Jallystrips		S010371

IN THE BOX

Low Profile ERRP pump • 2m Plug & Play power cable • 11/2" BSP connector (for 40mm ID waste pipe) • Install manual

Information correct at time of going to press. Not all products are available in all regions. This document has been translated using AI and may contain inaccuracies.

Low Profile Cold Cabinet



CONDENSATE REMOVAL PUMP

Made from robust stainless steel, this pump is extremely easy to install and maintain. With a feature designed to keep waterways moving, reducing the opportunity for biofilm to settle, the pump is placed directly below retail refrigeration cabinets removing condensate during the defrost cycle.

700L/h max. flow

20m max. head
(Flow rate 10 L/h)

Key Features

- Integrated jet flow dispersal system to reduce biofilm build up
- Robust, abrasion resistant stainless steel casing
- Multiple inlets for flexible installation (top, end & boths sides)
- Removable barbed brass oulet connector for ease of maintenance

Suitability

- Shallow 75mm height, lower than traditional dairy units
- Single and multiple refrigeration units, OEM
- ***Perfect for...*** multiple refrigeration units with shallow access

4.8 kg

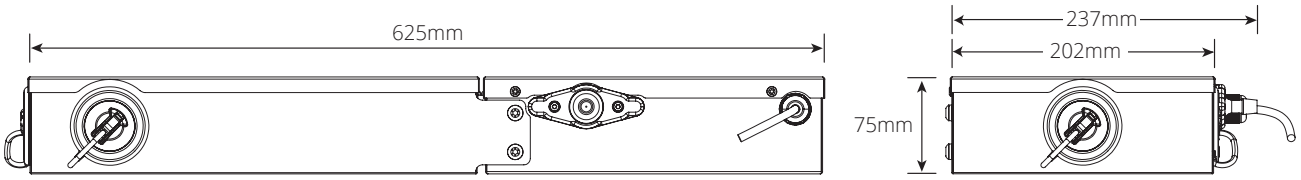

@ 230 VAC 50Hz	
Max. flow	700L/h @ 0m head
Max. head	20m (Max. rec. 18m)
Tank capacity	4.6L
dB(A) @1m	60
Power supply	230 VAC, 0.6A, 50/60Hz
Rated	Non continuous
Class	I
Max. unit output	1.59m Btu/h – 460kW
Max. water output	40°C / 104°F
Inlet/Outlet	4x ø48mm holes with plugs with 3x inlet plugs assembles
IP Protection	IP44
Safety Switch	1A Normally closed
Thermal protection	✓
Fully potted	n/a
Self priming	n/a

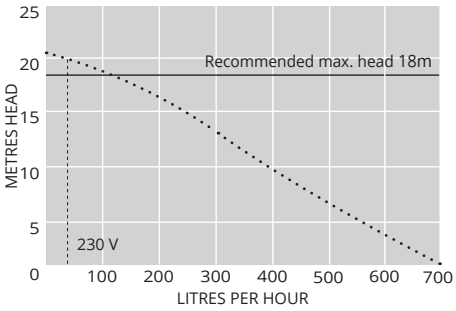

SUGGESTED ACCESSORIES		
Description		Part No.
1 Amp Fuse		FP2620
Tube to Soil Stack Adaptor		FP2038
Vinyl Tube Braided 3/8" (10 mm)		AX5101

OPTIONS	
LP Cold Cabinet – top, end and both side inlets	FP3393

IN THE BOX

• Low Profile Cold Cabinet pump • 3 x inlet plug assemblies • 1 x inline Non-return valve (NRV) • 1 x 1 1/2" waste connector for 40mm waste pipe • 1 x 3/8"-1/2" outlet pipe adaptor • Install manual

Download manual at aspenpumps.com

Information correct at time of going to press. Not all products are available in all regions. This document has been translated using AI and may contain inaccuracies.



Macerator 4L

CONDENSATE REMOVAL PUMP

The Macerator pump efficiently handles condensate and defrost water from multiple refrigeration units, and will deliver reliable, quiet performance in high-demand commercial environments.

780L/h max. flow

8.5m max. rec. head (flow rate 80L/h)

Key Features

- Internal filter blade
- High flow & head
- High level safety switch

Suitability

- Single and multiple refrigeration units
- ***Perfect for...*** handling food waste that may pass through the pump



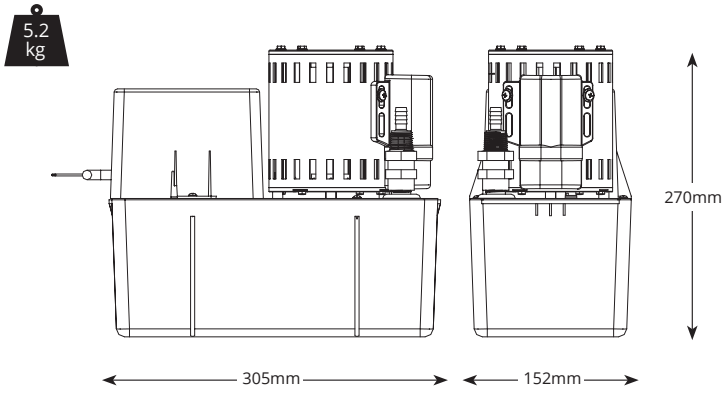

MACERATOR 4L @ 230 VAC 50-60HZ	
Max. flow	780L/h
Max. rec. head	8.5m
Tank capacity	4L
Sound level@1m	64dB(A)
Power supply	230VAC, 50Hz, 1.1A
Rated	Continuous
Class	I appliance
Max. ambient temp	40°C/104°F
Max. water temp	40°C/104°F
Inlet/outlet	40mm in,10mm out
IP Protection	IP20
Safety switch	5.0A Normally closed

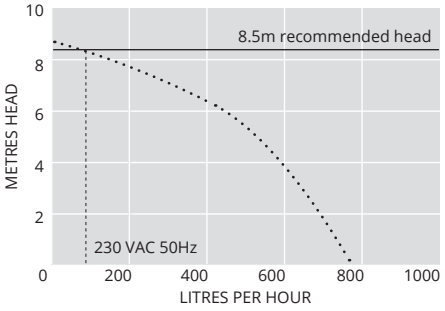

SUGGESTED ACCESSORIES		
Description		Part No.
Vinyl Tube Braided 3/8" (10mm)		AX5101

MACERATOR 4L OPTIONS	
Macerator 4L	FP2305/3

IN THE BOX

Macerator 4L pump • Hard wired 2m power cable • Install manual

Download manual at aspenpumps.com

Information correct at time of going to press. Not all products are available in all regions. This document has been translated using AI and may contain inaccuracies.

Boiler Pumps

A condensing boiler is a high efficiency boiler that recycles and takes heat from the exhaust gases leaving excess water. Our high performance boiler pumps remove this excess water offering excellent performance, easy inspection and great aesthetics.



Endurance



Kitchen



1 Kitchen boiler pump wall mounted beneath boiler.

2 Hi-Capacity boiler pump floor mounted next to floor standing boiler.

Information correct at time of going to press. Not all products are available in all regions. This document has been translated using AI and may contain inaccuracies.

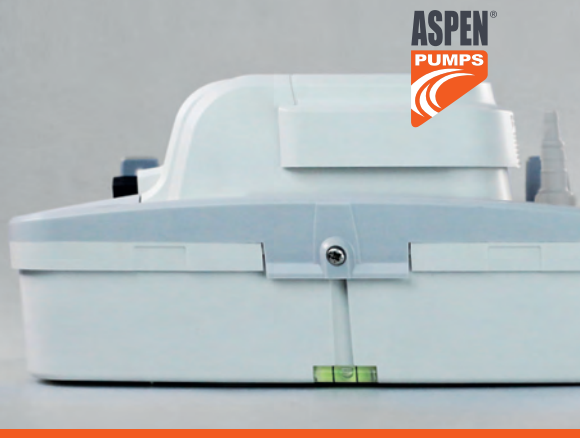

Endurance

BOILER CONDENSATE REMOVAL PUMP

The Aspen Endurance has been ruggedised to maximise reliability in boiler applications. Its construction allows short infrequent temperature excursions to 85°C.
It can handle pH > 2.2 for applications where a neutraliser is not required.
Max head is 5.5m and flow is 550L/h / 9L/m / 0.15L/s.

550 L/h Max. flow

5m max. head
(flow rate 55L/h)

Key Features

- Stainless steel motor shaft
- Max. working temperature 60°C with short infrequent excursions to 85°C (<5 min)
- Thermally protected maintenance free motor
- IP24 protection against water splashes

Suitability

- Up to 200 kW / 682,000 Btu/h
- Suitable for acidic condensate with pH >2.2 and <2.2 with neutraliser
- Spirit level for ease of install
- ***Perfect for...*** Larger domestic & commercial condensing boilers

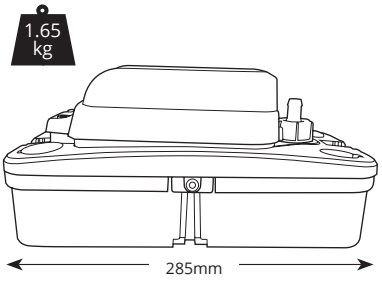

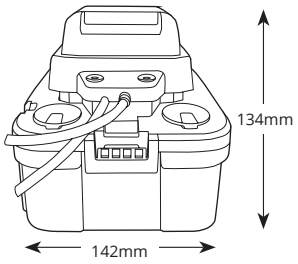

Non-return valve can be cut from 6mm to 10mm (see graphs below)

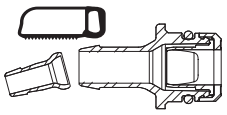

@ 230 VAC 50Hz	
Max. flow	550 L/h @ 0m head
Max. rec. head	5m
Tank capacity	1.5L
dB(A) @1m	44 dB(A)
Power supply	230 VAC, 50/60Hz, 0.8A
Rated	Non continuous
Class	I
Max. unit output	200kW (682,000 Btu/h)
Max. water output	60°C (140°F)
Inlet/Outlet	x4 21-27mm in 6 & 10mm out
IP Protection	IP24
Safety Switch	3.0A Normally closed
Thermal protection	✓

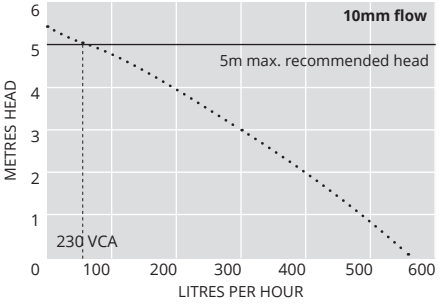

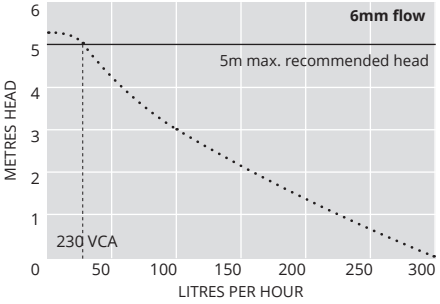

OPTIONS	
Endurance (EU)	FP3500
Endurance (UK)	FP3501

SUGGESTED ACCESSORIES		
Description		Part No.
Tube Soil Stack Adaptor		FP2038
1 Amp Fuse		FP2620
Vinyl Tube Braided 1/4" (6mm)		AX5100
Vinyl Tube Braided 3/8" (10mm)		AX5101

IN THE BOX

Endurance pump • Outlet Adapter
• Clear PVC hose (6m of 10mm)

Download manual at aspenpumps.com

Information correct at time of going to press. Not all products are available in all regions. This document has been translated using AI and may contain inaccuracies.



Kitchen

BOILER CONDENSATE REMOVAL PUMP

Designed to take the heat! Extra quick & easy to fit, the Kitchen all-in-one boiler pump is designed to be fitted beneath domestic gas boilers and furnaces.

- 12 L/h max. flow
- 10m max. head (flow rate 4 L/h)
- 21dB(A)

Key Features

- Compact & discreet
- Mounts under boiler
- Quiet operation
- Clear removable reservoir

Suitability

- Up to 45kW / 153,000 Btu/h with condensate pH value >2.7
- ***Perfect for...*** Domestic gas fired condensing boilers & furnaces

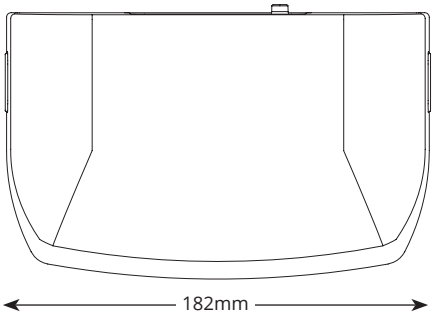

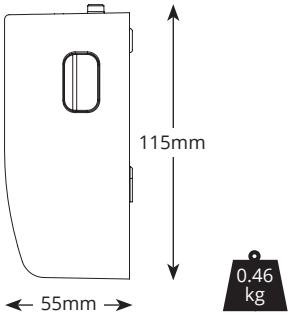

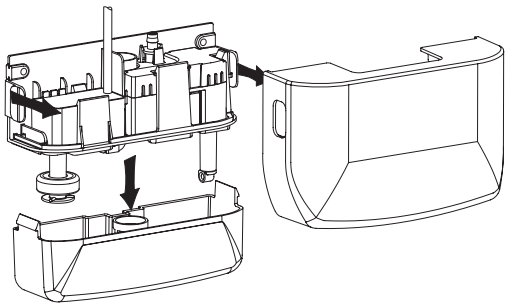

@ 230 VAC 50Hz	
Max. flow	12L/h @ 0m head
Max. rec. head	10m
Tank capacity	0.24L
dB(A) @1m	21dB(A)
Power supply	230 VAC, 50-60Hz, 0.1A
Rated	Non continuous
Class	II ⧈
Max. unit output	45kW (153,000 Btu/h)
Max. water output	60°C (140°F)
Inlet/Outlet	20mm in, 6 mm out
IP Protection	IP21
Safety Switch	3.0A Normally closed
Thermal protection	✓
Fully potted	✓
Self priming	n/a

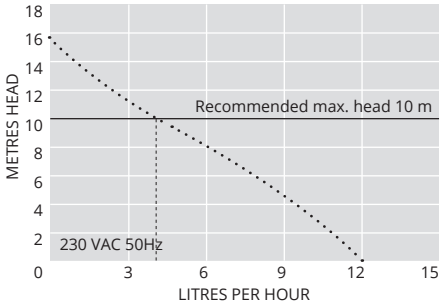

OPTIONS	
Kitchen	FP2943

SUGGESTED ACCESSORIES		
Description		Part No.
Tube Soil Stack Adaptor		FP2038
1 Amp Fuse		FP2620
Vinyl Tube Braided 3/8" (10 mm)		AX5100
Acid Neutraliser		FP1021

IN THE BOX

Kitchen boiler pump (inc. 1m power cable) • 6m discharge tube (6mm ID) • Inlet adaptor for 22 & 28mm pipe • Pipe adaptor • Fixing kit • Install manual

Download manual at aspenpumps.com

Information correct at time of going to press. Not all products are available in all regions. This document has been translated using AI and may contain inaccuracies.

Silent+ Mini Pumps

16 dB(A) The World's Quietest Mini Pump

Up to **46** kW One Size Fits All

3 year warranty No Maintenance

"Definitely 'quietly brilliant' 🤫"

" The new Mini Limes are very very quiet!!!
Had to pop the cover off to see if it was running!**"**

" Very impressed at how quiet they are."



INSTALLATION VIDEOS



Silent+ Mini White
FP3450

Silent+ Mini Aqua
FP3420

Silent+ Mini Orange
FP3430

Silent+ Mini Lime
FP3322/5 (Pump only)

ASPEN PUMPS GROUP

aspenpumps.com I +44 (0)1323 848842 I sales@aspenpumps.com

16dB(A) assuming solid wall construction with a 2kW unit



02

Hand Tools	38-51
Cutters	52-54
Lifters	55-56

SERVICE & TOOLING

ASPEN PUMPS GROUP



Left to right: JAV-1010, JAV-1015, JAV-1013, JAV-1012,
JAV-1014 Cuts stainless steel up to 3mm thick. Heavy duty with 6 ball bearing rollers
JAV-1011 Ratchet tube cutter set (includes JAV-1010 tube cutter), JAV-1009



Smart spring design



JAV-1011: 2-in-1

Tube Cutters

JAVAC EDGE 1 PATENTED DESIGN.

All our JAVAC Edge tube cutters feature:

- Titanium plated blade
- Patented Smart Spring Design
- Automatic Cutting. The spring pressure advances the blade when cutting, so there is no need to re-tighten the cutter

Size	Tube Cutter	Replacement blades (packs of 2)
1/8 – 5/8”	JAV-1009	JAV-1008
1/8 – 7/8”	JAV-1010	JAV-1001
1/8 – 7/8”,	JAV-1011	
1/8 – 1-1/4”	JAV-1012	
1/8 – 1-5/8”	JAV-1013	JAV-1005
1/4 – 1-1/4”	JAV-1014	JAV-1006
3/8 – 2-5-8”	JAV-1015	JAV-1003

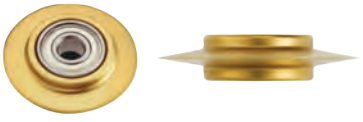

Replacement blades

Information correct at time of going to press. Not all products are available in all regions. This document has been translated using AI and may contain inaccuracies.





Tube positioning plate

Eccentric Flaring Tool

JAVAC EDGE 1 5 PATENTED DESIGN.

Avoid leaks, make the perfect flare the easiest way with the Tube Positioning Plate – the plate ensures the tube is set at the correct position

- Hard plastic carry case

Set options	Part No.
7 Sizes: 3/16" 1/4", 5/16", 3/8", 1/2", 5/8", 3/4"	JAV-1024
7 Sizes: 6, 8, 10, 12, 15, 16, 18mm	JAV-1185

Flare Size Gauge

Designed to measure all flares to offer 100% seal tightness against all flare fittings, a must for every toolbox.

Description	Part No.
Flare Size Gauge	JAV-1022



Information correct at time of going to press. Not all products are available in all regions. This document has been translated using AI and may contain inaccuracies.



2-in-1 Flaring & Swaging Tool

JAVAC EDGE 1 5 PATENTED DESIGN.

An easy to use 2-in-1 one design that can be used to flare or swage. Perfect flaring and swaging, less to carry with extra room in the van for more tools!

- Diamond Flaring Cone deburrs and polishes during the flaring process creating an exceptional finished surface, meaning less time deburring
- Patented Diamond Flaring Cone has a unique 'square edge fitting' so when attached the cone is allowed to spin as you turn the handle. Creating a perfectly smooth finish
- Indexing Mechanism Provides accurate alignment when switching between different hole positions on the flaring bar.
- Tube Positioning Plate ensures the tube is set at the correct position for all sizes
- Hard plastic carry case
- Hard drawn copper must be heated prior to use

Set options	Part No.
6 Sizes: 1/4", 5/16", 3/8", 1/2", 5/8", 3/4"	JAV-1023
7 Sizes: 6, 8, 10, 12, 15, 16, 18mm	JAV-1184

Information correct at time of going to press. Not all products are available in all regions. This document has been translated using AI and may contain inaccuracies.



Tube positioning plate

Dual Clutch Eccentric Flaring Tool

JAVAC EDGE 1 5 PATENTED DESIGN.

Dual clutch design. Clutch releases when the flare is complete to prevent over compression

- Drill powered or manual
- Lightweight aluminium body and superior steel core
- Hard plastic carry case

Description	Part No.
7 sizes: 3/16” 1/4”, 5/16”, 3/8”, 1/2”, 5/8”, 3/4”	JAV-1034
7 Sizes: 6, 8, 10, 12, 15, 16, 18mm	JAV-1186

Information correct at time of going to press. Not all products are available in all regions. This document has been translated using AI and may contain inaccuracies.







90° Indicator



Reverse bending adaptor

Tube Bender Set

MULTI SIZE

JAVAC EDGE 1 5 PATENTED DESIGN.

- Patented 90° Indicator feature so you know when the tube has accurately reached a perfect 90° bend
- Complete with Reversing Adaptors to bend pipe in all directions with ease - perfect for awkward spaces
- 7 x mandrel sizes; 1 x Reverse bending attachment
- Hard plastic carry case
- For use on soft drawn copper only

Set options	Part No.
7 Sizes: 1/4", 5/16", 3/8", 1/2", 5/8", 3/4", 7/8"	JAV-1021
7 Sizes: 6, 8, 10, 12, 15, 18, 22mm	JAV-1183

Spares

Counterformer	Part No.
1/4 - 3/8"	JAV-9001
1/2 - 7/8"	JAV-9002

Mandrel	Part No.
1/4"	JAV-1143
5/16"	JAV-1144
3/8"	JAV-1145
1/2"	JAV-1146
5/8"	JAV-1147
3/4"	JAV-1148
7/8"	JAV-1149
16 mm	JAV-1044

Information correct at time of going to press. Not all products are available in all regions. This document has been translated using AI and may contain inaccuracies.



JAV-1025

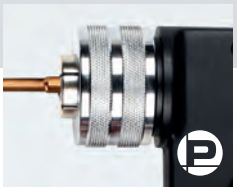

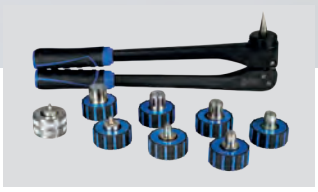

1/4” / 6mm Expander Head*

Tube Expander Set

MULTI SIZE

JAVAC EDGE | 1 | 5 | PATENTED DESIGN.

- Patented 1/4” / 6mm Expander Head makes small to large pipework joining installations a breeze
- Hard plastic carry case
- Hard drawn copper must be heated/annealed

Set options	Part No.
8 Sizes: 1/4”, 3/8”, 1/2”, 5/8”, 3/4”, 7/8”, 1”, 1-1/8”	JAV-1025
8 Sizes: 6, 8, 10, 12, 15, 16, 18, 22mm	JAV-1187

Expander Heads Only

Sizes	Part No.
1/4”	JAV-1081
1/2”	JAV-1080
3/4”	JAV-1082
3/8”	JAV-1083
5/8”	JAV-1084
7/8”	JAV-1085
1”	JAV-1088
1-1/8”	JAV-1086
1-3/8”	JAV-1054
1-5/8”	JAV-1055

Sizes	Part No.
6mm	JAV-1188
8mm	JAV-1189
10mm	JAV-1190
12mm	JAV-1191
15mm	JAV-1192
16mm	JAV-1193
18mm	JAV-1194
22mm	JAV-1195
25mm	JAV-1196
28mm	JAV-1197

Information correct at time of going to press. Not all products are available in all regions. This document has been translated using AI and may contain inaccuracies.



HYDRA-MB7 Hydraulic Bender

JAVAC EDGE 1 5 PATENTED DESIGN.

- Delivers accurate bends for both imperial and metric soft copper pipe
- Ergonomic and robust in design
- Hand wheel hydraulic quick release
- Steel formers and counter formers
- 1/4", 5/16", 3/8", 1/2", 5/8", 3/4", 7/8"
- Quick change between sizes
- Delivered as a complete kit, with spare former and counter formers available
- Hard plastic carry case
- Only for use on soft drawn copper

Description	Part No.
HYDRA-MB7 Hydraulic Bender	JAV-1394
Kit includes: *1 x Hydraulic Bender Tool, 1 each of 7 Formers – 1/4", 5/16", 3/8", 1/2", 5/8", 3/4", 7/8" (6mm – 22mm)*	

HYDRA-MB7 Spares	Part No.
1/4" Former	JAV-1395
5/16" Former	JAV-1396
3/8" Former	JAV-1397
1/2" Former	JAV-1398
5/8" Former	JAV-1399
3/4" Former	JAV-1400
7/8" Former	JAV-1401
1/4 – 5/16 Counter Former	JAV-1402
3/8 – 1/2 – 5/8 Counter Former	JAV-1403
3/4 – 7/8 Counter Former	JAV-1404

Information correct at time of going to press. Not all products are available in all regions. This document has been translated using AI and may contain inaccuracies.



HYDRA-XP9 Hydraulic Expander

JAVAC EDGE 1 5 PATENTED DESIGN.

- Universal for imperial and metric pipe
- Single-handed operation
- Compact design permits working in hard to access areas
- Laser-engraved expander heads are easy and quick to identify and attach
- De-burring tool included in the kit
- Angled and ergonomic design requires less effort
- Hard plastic carry case
- Spare heads available
- Only for use on soft drawn copper

Description	Part No.
HYDRA-XP9 Hydraulic Expander – imperial	JAV-1405
Kit includes: 1 x Hydraulic Expander Tool, 1 x Deburring Tool, 1/4", 3/8", 1/2", 5/8", 3/4", 7/8", 1 1/8", 1 3/8", 1 5/8"	
HYDRA-XP9 Hydraulic Expander – metric	JAV-1434
Kit includes: 1 x Hydraulic Expander Tool, 1 x Deburring Tool, 1 each of 9 Heads – 6, 10, 12, 16, 18, 22, 28, 35, 42 mm	

Dimensions	L: 250 mm W: 45 mm H: 120 mm
Weight	2.6 lbs (1.2 kg)
Suitable for	Soft pipes only: copper, aluminium, brass

Spares

Size	Part No.
1/4"	JAV-1406
3/8"	JAV-1407
1/2"	JAV-1408
5/8"	JAV-1409
3/4"	JAV-1410
7/8"	JAV-1411
1 1/8"	JAV-1412
1 3/8"	JAV-1413
1 5/8"	JAV-1414

Size	Part No.
6 mm	JAV-1435
10 mm	JAV-1436
12 mm	JAV-1437
16 mm	JAV-1438
18 mm	JAV-1439
22 mm	JAV-1440
28 mm	JAV-1441
35 mm	JAV-1442
42 mm	JAV-1443

Information correct at time of going to press. Not all products are available in all regions. This document has been translated using AI and may contain inaccuracies.

JAV-1016 3/8”

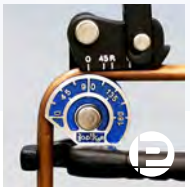



Dual hinge design

Tube Benders

MULTI SIZE

JAVAC EDGE 1 5 PATENTED DESIGN.

- Patented Dual Hinge Design – resets the handle position for extra leverage, making the second bend to 180º so simple.
- For use on soft drawn copper only



JAV-1019 3/4”

Sizes OD	Part No.
3/8”	JAV-1016
1/2”	JAV-1017
5/8”	JAV-1018
3/4”	JAV-1019
7/8”	JAV-1020

Sizes OD	Part No.
10mm	JAV-1177
12mm	JAV-1178
15mm	JAV-1179
16mm	JAV-1180
18mm	JAV-1181
22mm	JAV-1182

Information correct at time of going to press. Not all products are available in all regions. This document has been translated using AI and may contain inaccuracies.

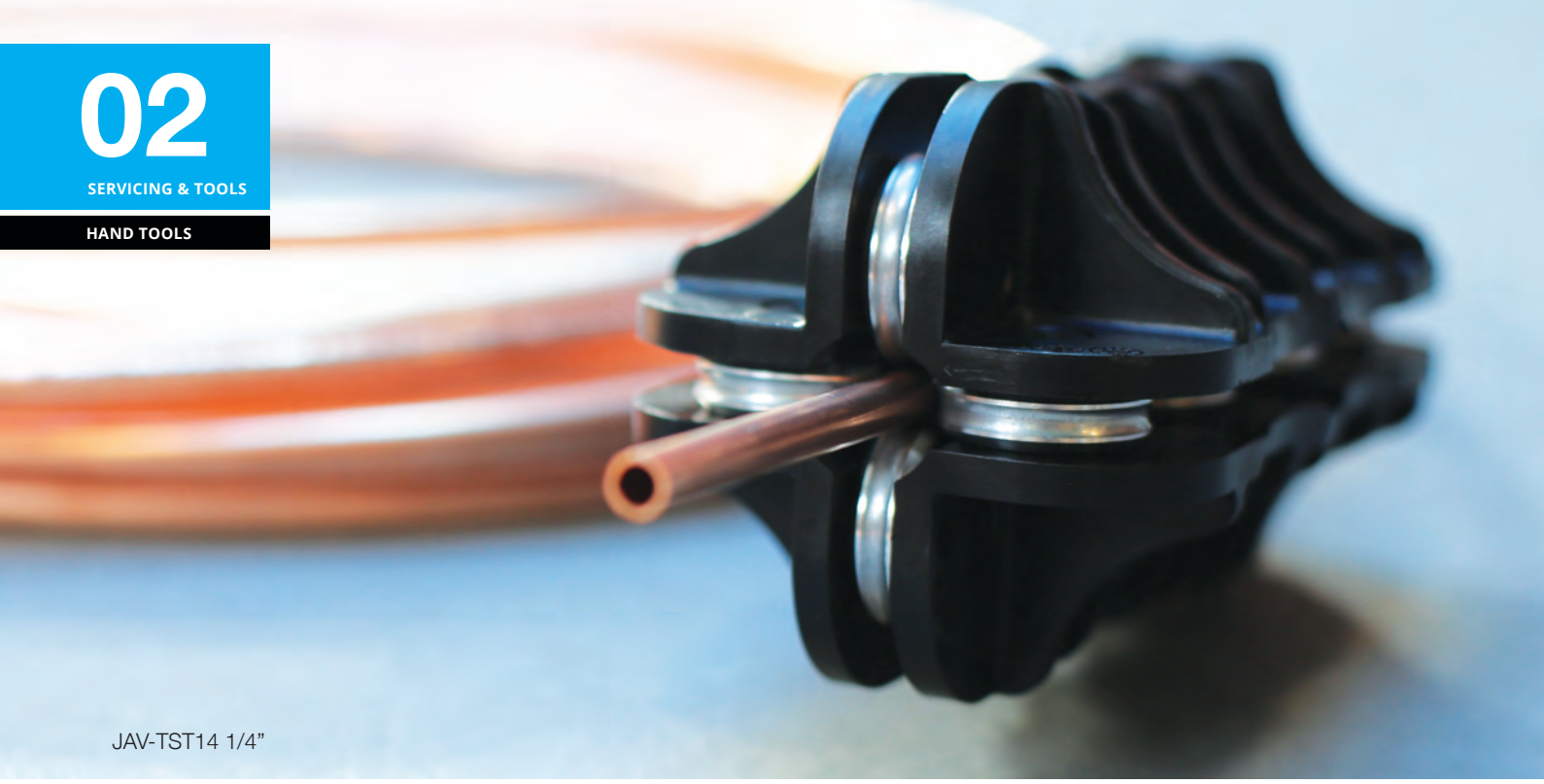

JAV-TST14 1/4”

Tube Straightener

JAVAC EDGE 1

- Accurately straightens light wall tube from coil
- Straighten what you need – less material wastage
- Accelerated flow for better efficiencies from straighter pipe
- Rollers spiral along the tube to straighten and strengthen the tube
- Create radius tube bends using the central hole
- For use on soft drawn copper only

Sizes OD	Part No.
1/4”	JAV-TST14
3/8”	JAV-TST38
1/2”	JAV-TST12
5/8”	JAV-TST58
6mm	JAV-1035
10mm	JAV-1036

Bending Kit

VECAMCO

- Facilitates bending of copper pipe
- Prevents the pipes from crushing during installation
- Avoids system failure due to pipe crushing
- Easy removal
- Reusable for multiple installations
- Reusable closure straps.

Part No.	Ø COPPER TUBE
9899-851-00	1/4” + 3/8”, 6.35 + 9.52 mm
9899-852-00	1/2” + 5/8”, 12.7 + 15.87 mm
9899-850-00	1/4” + 3/8” + 1,2” + 5/8” 6.35 + 9.52 + 12.7 + 15.87 mm

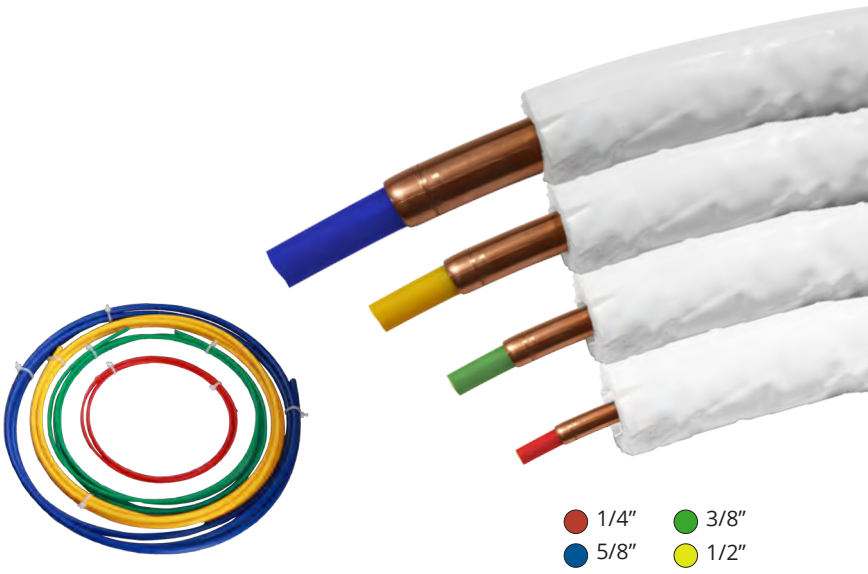

Information correct at time of going to press. Not all products are available in all regions. This document has been translated using AI and may contain inaccuracies.



Digital Torque Wrench

JAVAC EDGE 1 PATENTED DESIGN.

- Adjustable head
- Digital torque value readout
- +/- 2% accuracy
- CW and CCW operation
- Peak hold and track mode selectable
- Buzzer and LED indicator for the 9 pre-settable target torques
- Water contact indicator
- Engineering units (N-m, ft-lb, in-lb, kg-cm) selectable
- 50 or 250 data memory for recall and joint torque auditing
- Auto Sleep after about 5 minutes idle
- Compatible with rechargable batteries
- Hard plastic carry case

Part No.	Square Drive	Max. Torque
JAV-1356	3/8”	85 N-m / 62.7 ft-lb / 752 in-lb / 867kg-cm

Accuracy		Torque Measuring Range (N-m)	Length
B	+/-2%-CW / +/-3%-CCW	4.2~85	270mm

Accuracy 1	BN	BR
	CW : ±2% CCW : ±3%	
Data memory size	50	250
PC Connectivity 2	No	No
Pre-Setting No.	9 sets	
Bright LED	6 LEDs (1 Red + 5 Green)	
Operation Mode	Peak hold/Track	
Unit Selection	N-m, in-lb, ft-lb, kg-cm	
Head Type	Adjustable wrench head	
Gear Teeth	52	
Size of Head of End Fitting (WxH)	9 x 12mm	
Axial Distance	17.5mm	
Button	5	
Battery 3	AAA x 2	
Operating Temperature	-10°C ~ 60°C	
Storage Temperature	-20°C ~ 70°C	
Humidity	Up to 90% non-condensing	
Drop Test	1m	
Vibration Test 4	10G	
Environmental test 5	Pass	
Electromagnetic compatibility test *6	Pass	

Information correct at time of going to press. Not all products are available in all regions. This document has been translated using AI and may contain inaccuracies.



JAV-1358

Piercing Plier

JAVAC 1

Designed to immediately pierce into any charging tube on all HVAC/R systems, mostly used in domestic applications

- Once the tube is pierced simple charging or evacuation can be carried out with minimal fuss
- Once complete the tube can be pinched off with the JAVAC Pinch off plier (JAV-1357) and the system can then be sealed

Description	Part No.
Piercing Plier	JAV-1358
Spare Needles (x10)	JAV-1359

Pinch Off Plier

JAVAC 1

The JAVAC Pinch Off Pliers are designed to pinch off copper tube up to 8mm thickness

- Locking jaw
- Pinches off and locks in place

Description	Part No.
Pinch off plier	JAV-1357



Information correct at time of going to press. Not all products are available in all regions. This document has been translated using AI and may contain inaccuracies.







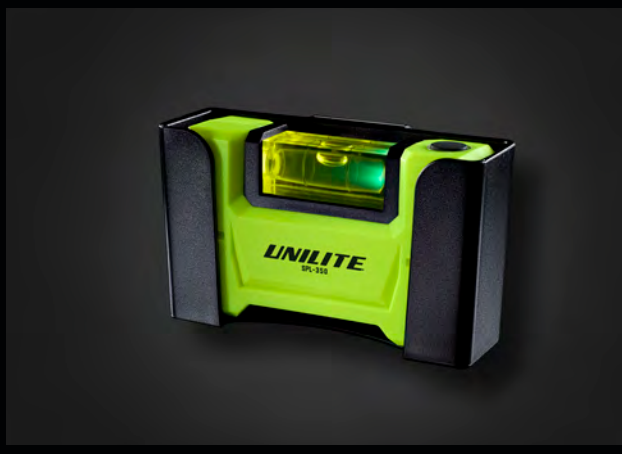

SPL-350 | SPIRIT LEVEL WITH WORKLIGHT

- 350 Lumen LED spirit level worklight
- Light-up spirit level vial & red laser pointer
- Tough ABS & aluminium construction
- Glow-in-the-dark strip around the LED
- Strong rear & side magnets
- Strong holster with belt clip
- Smart Memory – remembers last mode used
- IPX4 water resistant
- High quality 3.7v 800mAh Li-ion battery
- Battery level & charging indicator
- Low battery warning flash, reminds to charge
- Fast 2A USB-C charging – 1.5 hr charge time
- 1m high quality USB-C charging cable included

BATTERY	3.7v 800mAh Li-ion
WEIGHT	177g
DIMENSIONS	H 55 x W 90 x D 20mm

UNILITE

LUMEN 350LM | **RUNTIME** 1-25H | **BEAM** 23M | **IP RATING** IPX4

Information correct at time of going to press. Not all products are available in all regions. This document has been translated using AI and may contain inaccuracies.







MT5M2 | HEAVY DUTY TAPE MEASURE

- Heavy duty 5m tape measure with 27mm wide blade
- Ultra high performance nylon coated SUPERBLADE - 5 x extended life
- 2.9m/9.5ft high stand-out blade
- SUPERBLADE withstands durability tests of falling sand particles with 60 litres of salt spray for 100 hours
- Magnetic triple riveted stainless steel dual hook with 1kg suction
- Dual colour double sided imperial & metric blade
- Durable rear pocket clip - wont detach even if screw loosens
- Powerful push lock secures the blade
- Superior internal mechanism provides smooth operation
- Impact resistant TPR covered ABS casing
- Drop tested from 9m

UNILITE

WEIGHT 322g | **DIMENSIONS** H 76.5 x W 79 x D 51.8mm

Information correct at time of going to press. Not all products are available in all regions. This document has been translated using AI and may contain inaccuracies.









UK1 | FOLDING UTILITY KNIFE

- Heavy duty nickel body with ABS and a TPR grip
- 4 x SK5 black steel blades included
- 1 blade installed and 3 replacement blades conveniently stored inside
- Multi-position folding design
- Easy press unlocking button
- Quick release blade change
- Convenient wire/strap cutter slot
- Useful hole for attaching a lanyard
- Accepts most standard utility blades
- Extended size H 175 x W 33 x D 23.5mm

WEIGHT 125g | **DIMENSIONS** H 116 x W 41.5 x D 23.5mm

Information correct at time of going to press. Not all products are available in all regions. This document has been translated using AI and may contain inaccuracies.









EK4 | HEAVY DUTY FOLDING UTILITY KNIFE

- Heavy duty folding utility knife
- High-carbon 3Cr13 stainless steel blade
- 'Drop point' blade with serrated edge and tapered spine swedge
- Blade spine includes thumb rise for extra grip and 2 wire stripper notches
- Assisted one-handed opening with thumb studs
- Blade hardness 52-55 HRC
- Ultra tough ergonomic aluminium handle with front Quillion finger guard
- Easy to operate one-handed 'Framelock' mechanism
- Pocket clip for easy carrying

WEIGHT 135g | **DIMENSIONS** Length: 195mm

Information correct at time of going to press. Not all products are available in all regions. This document has been translated using AI and may contain inaccuracies.









FK3 | HEAVY DUTY FOLDING UTILITY KNIFE

- Heavy duty folding utility knife
- High-carbon 3Cr13 stainless steel blade
- 'Clip point' blade with serrated edge and tapered spine swedge
- Blade spine includes thumb rise for extra grip
- Blade hardness 52-54 HRC
- Assisted one-handed opening with thumb studs
- Easy to operate one-handed 'Liner lock' mechanism
- Ultra tough ergonomic aluminium handle with front Quillion finger guard
- Pocket clip for easy carrying
- Hole in the handle for adding a lanyard

WEIGHT 119.5g | **DIMENSIONS** Length: 198mm

Information correct at time of going to press. Not all products are available in all regions. This document has been translated using AI and may contain inaccuracies.




Quick-release control


Trolley system



Portable Lifter 3.7m

JAVAC EDGE 1 5

The ultimate solution designed to assist with the lifting and positioning of heavy equipment in the HVAC industry.

- The lifter is suitable for use with condensers, evaporators, ductwork, air handling units, pipework plus many other uses
- Featuring its extendable legs, wide platform base and robust design the lifter offers unparalleled suitability and adaptability for almost all HVAC lifting and positioning requirements
- Designed to endure tough conditions allowing you to work safely, securely and efficiently

Description	Part No.
Portable Lifter 3.7m	JAV-1353

Kit includes: 1 x Platform, 1 x Telescoping mast, 1 x Pulley with pulley cover, 1 x Steel cable, 1 x Motor and gearbox, 1 x Sliding ring, 4 x Legs, 2 x Wheel, 1 x Lever to select going up or down, 1 x Emergency Stop push button, 1 x Trigger button to control speed, 1 x Wheeled bag

Operational Voltage	220V ~ 240V @ 50/60Hz
Operation Current	4 Amp
Motor Duty	S3 30%
Plug Type	EU plug and UK plug adaptor
Max. Load Capacity	130kgs (3.0m height)
Basic Height	1m
Lifting Height	3.69m
Standard Platform	75 x 44cm
Operating Size	115 x 118cm
Length of controlling cable	4m
Length of power cord	2.7m
Ambient temperature	-5 °C to 45 °C
IP Level	IP43
Packaging box size	102 x 28 x 33cm
Weight	33.8 kgs
Accessories	Manual Handle
Safety Standard	EN 60204-1:2018 / EN ISO 12100:2010
Compliance	WEEE / CE / UKCA

Information correct at time of going to press. Not all products are available in all regions. This document has been translated using AI and may contain inaccuracies.

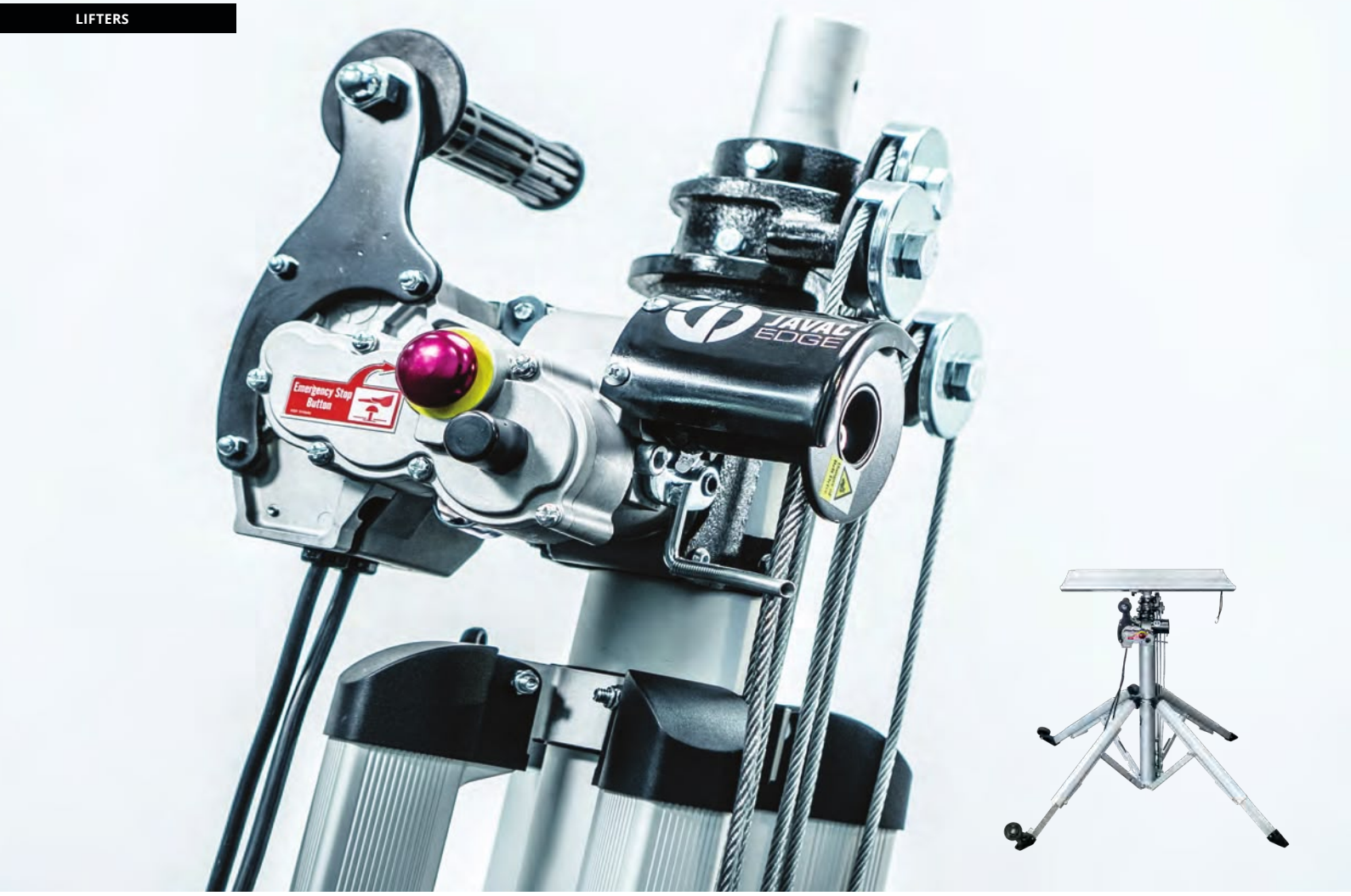

Portable Lifter 5m

JAVAC EDGE 1 5

Engineered to minimise manual handling risks and enable safe raising and lowering of condensers, evaporators, duct work, air handling units and more. Built with a rugged construction to endure tough site conditions, complete with an innovative base featuring a small set of wheels to allow for easier transportation. The addition of a quick release cable brings easier operation and storage, with an optional remote control unit available to give even more practical possibilities.

- Load Capacity - 140kg @ 3m, 130kg @ 4m and 90kg above 4m.
- Folding Aluminium Platform - strong but low weight and hard wearing.
- Quick Release 5m Cable - makes storage and set up quicker and easier. No messy cables to store.
- Comes complete in a robust carry bag to protect and store safely.
- Robust aluminium telescoping mast and four folding support legs ensure safe and secure operation. Each leg is versatile, and able to be adjusted individually, so prefect for uneven ground.
- Built-in spirit level to ensure correct set up before lifting.

Description	Part No.
Portable Lifter 5m	JAV-1352

Optional Extra	Part No.
Remote Control	JAV-1559

Enables single person operation from a safe working distance on the ground, rooftops or windows.

Operational Voltage	220 V
Max. Load Capacity	140 kg/3m, 130kg/4m, 90kg/over 4m
Basic Height	1.17 m
Lifting Height	4.95 m
Operating Size	148 x 140 cm
Weight	36 kg

Information correct at time of going to press. Not all products are available in all regions. This document has been translated using AI and may contain inaccuracies.

03
VACUUM & CHARGING

Recovery Units	58-62
Vacuum Pumps	63-65
Ultimate Hi-Flow	66-74
Hose	75-79
Kits	80
Manifolds	81
Gauges & Oils	82-83
Thermometers	84
Scales	85-86
Nitrogen	87-89
Accessories	90

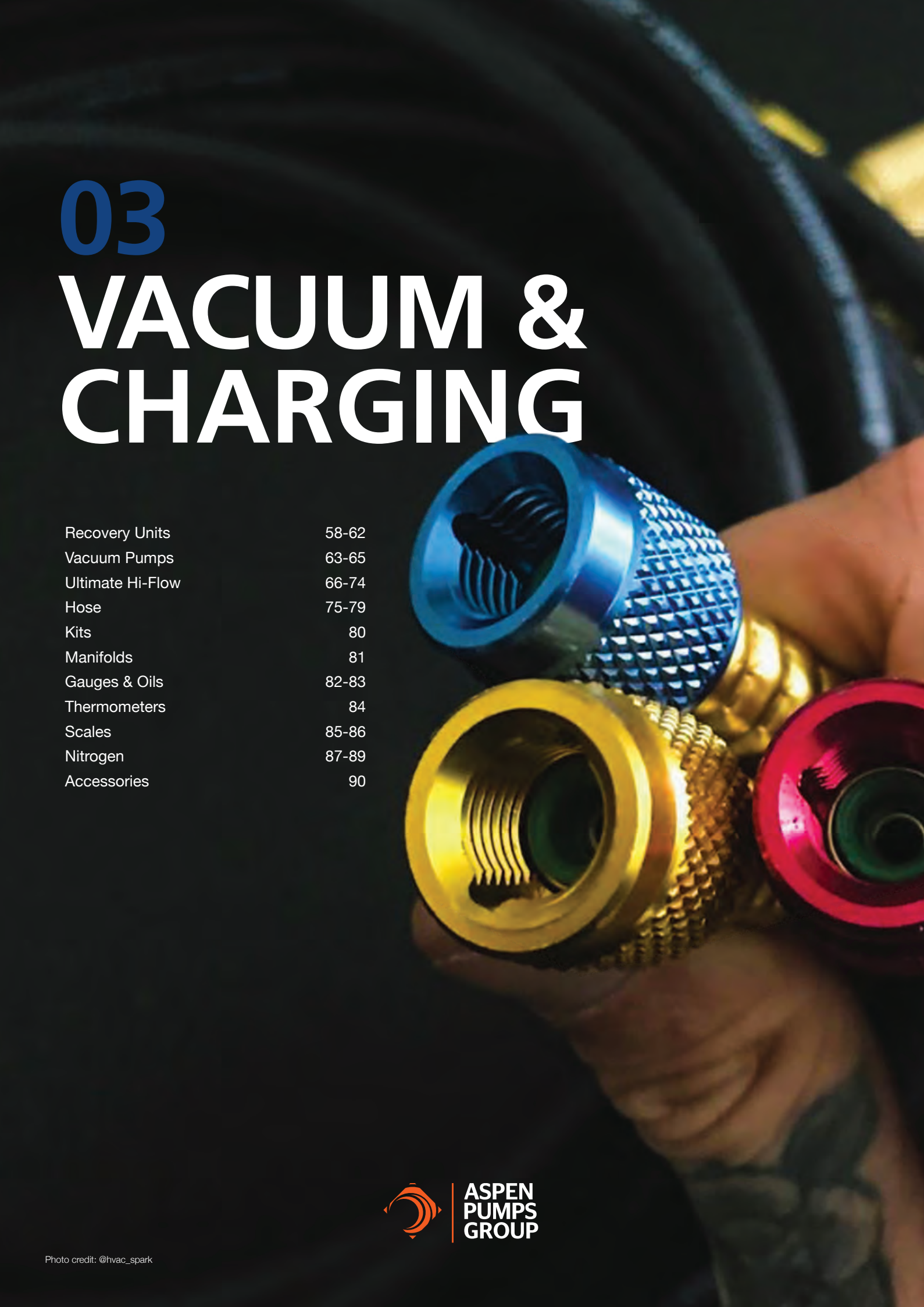

ASPEN PUMPS GROUP

Photo credit: @hvac_spark



Velo-X Twin Cylinder Recovery Unit

JAVAC EDGE 1 A3 A2L 5 115/230V

The JAVAC Edge Velo-X. Our first recovery unit fully compatible with all A2L and A3 refrigerants. Industry leading recovery rates and JAVAC reliability giving our quickest and most efficient solution yet.

- R32 / R1234YF / HFC / HCFC / CFC / HFO / A2L / A3
- Lightweight complete with shoulder strap
- LED indicator showing recovery and machine status
- 5m hard wired cable and spark proof switch
- Dual gauge monitoring shows the tank and system pressures with integrated low pressure auto-off switch.
- Intelligent safety sensing
- Includes reusable mesh particulate filter for the suction port which can be easily cleaned or replaced

Recovery Rates (R410a)	
Liquid	377kg per hour
Vapour	20kg per hour
Push / Pull	408kg per hour

Description	Part No.
Velo-X Twin Cylinder Recovery Unit	JAV-1424

Power supply	Universal Voltage 100-240VAC 50/60Hz
Motor size	1.25 HP
Motor Type	Variable Speed Brushless DC, 1500-3000 rpm
Maximum current	12.0 amps
Compressor	2 Cylinder Oil-less Reciprocating, Air Cooled
High Pressure Cutout (Manual reset)	550 PSIG
Operating Temperature Range	0 to 49 °C
Dimensions	370 × 245 × 325 mm
Weight	13,8 kg

Information correct at time of going to press. Not all products are available in all regions. This document has been translated using AI and may contain inaccuracies.



XTR-Altima A2L

SPARK PROOF REFRIGERANT RECOVERY UNIT

JAVAC EDGE 1 A2L 5

- Suitable for R32, R1234YF plus all standard refrigerants
- Spark proof design: 5 m hard wired cable
- Protected switches & circuit breaker
- Fast recovery rates, twin head compressor
- High torque AC motor

Description	Part No.
XTR-Altima A2L	JAV-1059

Suitability	R32, R1234YF, HFC/HCFC/CFC/A2L, Standard
Push/Pull (kg/hr)	660
Vapour (kg/hr)	30
Liquid (kg/hr)	216
Power supply	230 V
Motor size	3/4 HP
HP cut out	500 psi (35 bar)
Compressor	V-Twin with electronic starter
Weight	16kg
Dimensions	420 x 290 x 420mm

Information correct at time of going to press. Not all products are available in all regions. This document has been translated using AI and may contain inaccuracies.



XTR-Ultra A2L

REFRIGERANT RECOVERY UNIT

- Ultra lightweight – 8.4kg
- Ultra fast liquid recovery rate – 120kg/hr
- Spark proof design: 5 m hard wired cable
- Suitability A2L, HFC, HCFC & CFC

Description	Part No.
XTR-Ultra A2L Recovery Unit UK	JAV-1063-A2L

Suitability	A2L / HFC / HCFC / CFC
Push/Pull (kg/hr)	420
Vapour (kg/hr)	19
Liquid (kg/hr)	120
Power supply	240 V
Motor size	3/4 HP
HP cut out	550 psi (38 bar)
Compressor	Oil less
Weight	8.4kg
Dimensions	320 x 220 x 260mm

Information correct at time of going to press. Not all products are available in all regions. This document has been translated using AI and may contain inaccuracies.



HC-3 Hydrocarbon

JAVAC 1 A3 A2L

- Liquid and vapour recovery with automatic changeover
- Self discharging and Hot Gas/Cool Gas discharge switch
- On board refrigerant storage facility – capacity 250g
- Automatic high and low pressure safety switches and manual low pressure override switch
- 110V and 240V models available
- Compressor protection, HP switch plus thermal overload

Description	Part No.
HC-3 Hydrocarbon	JAV-1032-EU

Suitability	R22, R134A, R404A, R407C,R410A, R413A, R417A, R502, R600A, R290, R1234YF, R32 & all CARE® blend refrigerants
Recovery (kg/hr)	32
Power supply	240 V
Motor size	145W
HP cut out	360 psi (25 bar)
Compressor	Hermetic oil-lubricated, air cooled
Weight	21kg
Dimensions	470 x 235 x 335mm

For use on A3 please scan the QR code to read the A3 safety instructions. **DO NOT USE UNLESS FULLY QUALIFIED FOR A3.**

Information correct at time of going to press. Not all products are available in all regions. This document has been translated using AI and may contain inaccuracies.



HC-Air Fan Ventilation Module

JAVAC 1 ATEX A3 A2L

- The HC-Air fan module is an essential service accessory to be used when transferring hydrocarbon refrigerant and should feature in the risk assessment process
- Commutated motor
- 5 m hard wired mains lead with moulded plug
- Non sparking thermoplastic fan blade for increased performance and reduced noise level
- Mains cable storage
- Robust painted steel casework

Description	Part No.
HC-Air Fan Ventilation Module	JAV-1033-EU

Airflow	700 m³ /h
Power supply	230 V 50Hz
Power Absorbed	25W
Fuse Protection	3A
Ambient temperature rating	-20ºC to 55ºC
Weight	6.48kg
Dimensions	300 x 220 x 380mm

For use on A3 please scan the QR code to read the A3 safety instructions. **DO NOT USE UNLESS FULLY QUALIFIED FOR A3.**

Information correct at time of going to press. Not all products are available in all regions. This document has been translated using AI and may contain inaccuracies.



Anti-oil demister
to prevent oil-mist

Intake fittings

Bulldog A2L/A3

SPARK PROOF VACUUM PUMP

JAVAC EDGE 1 A3 A2L 5 115/230V

- Spark proof design: 5 m hard wired 240 V cable
- Two stage oil sealed vacuum pump
- Isolation solenoid valve
- Dual oil mist filters to prevent oil mist
- Unique tri-connector offers three hose fittings designed to cover a broad range of application capabilities

Description	Part No.
Bulldog A2L	JAV-1075

Suitability	All standard and A2L/A3 applications
Stage	Double
Ultimate vacuum	15 Microns
Free air displacement	156 l/m (5.5 CFM)
Power supply	240 V 50Hz
Motor size	2880 rpm
Power cord	5 m, Glanded
Oil capacity	450ml
Intake fittings	1/4”, 5/16”, 3/8” SAE
Weight	12.5kg
Dimensions	338 x 212 x 238mm

For use on A3 please scan the QR code to read the A3 safety instructions. **DO NOT USE UNLESS FULLY QUALIFIED FOR A3.**

Information correct at time of going to press. Not all products are available in all regions. This document has been translated using AI and may contain inaccuracies.



CC Series A2L/A3

SPARK PROOF VACUUM PUMPS

JAVAC A3 A2L 5 115/230V

- High performance A2L / A3 range
- Sparkproof switches
- Hard wired 5m Lead
- Dual Voltage
- Solenoid valve
- Easy Access oil drain





Model	CC-31 A2L	CC-141 A2L	CC-231 A2L
Part No.	JAV-1069-A2L	JAV-1065-A2L	JAV-1067-A2L
Suitability	All standard and A2 / A3 applications		
Stage	Double		
Ultimate vacuum	15 microns		
Free air displacement	40 l/m (1.4 CFM)	151 l/m (5.3 CFM)	251 l/m (8.9 CFM)
Power supply	Dual voltage 110/240 V 50Hz		
Motor size	1/4 HP	1/2 HP	2/3 HP
Power cord	IEC		
Oil capacity	140 ml	540 ml	620 ml
Intake fittings	1/4” SAE, 3/8” SAE		
Weight	4.5 kg	11 kg	14.8 kg
Dimensions	265 x 105 x 220 mm	348 ×140 × 272 mm	380 × 160 × 285 mm

For use on A3 please scan the QR code to read the A3 safety instructions. **DO NOT USE UNLESS FULLY QUALIFIED FOR A3.**

Information correct at time of going to press. Not all products are available in all regions. This document has been translated using AI and may contain inaccuracies.

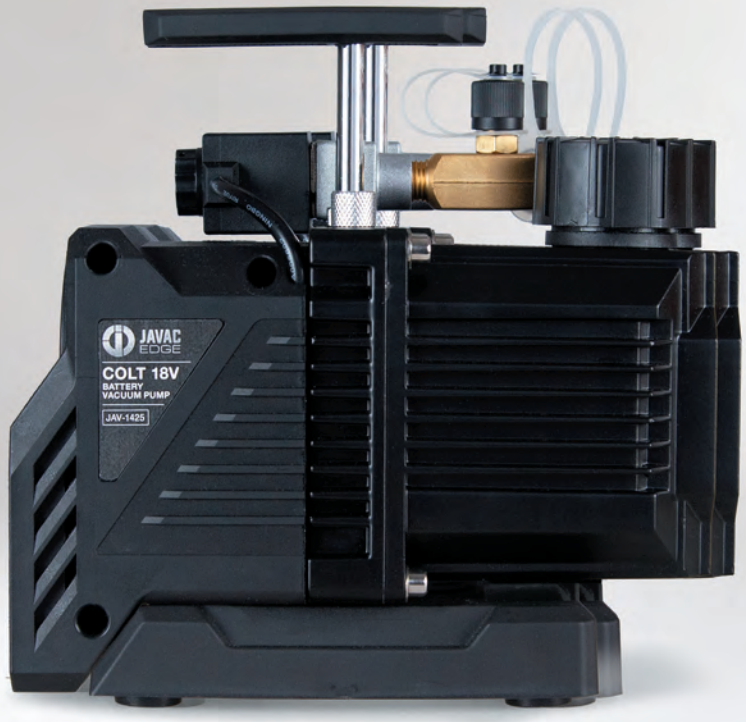

Colt 18V A2L/A3

SPARK PROOF BATTERY VACUUM PUMP

- Anti-oil-returning design + Solenoid Valve
- Anti-oil demister to prevent oil spillage
- 2CFM, 18V Brushless DC Motor
- 55 l/min, Oil circulation design
- Pump Only, Battery not included
  (Battery Adaptors included for Milwaukee and Makita)

Description	Part No.
Colt 18V Battery Vacuum Pump	JAV-1425

Suitability	All standard A2L and A3 applications
Power supply	18v, 5.0Ah Battery Powered
Ultimate vacuum	30 microns (4 Pa)
Free air displacement	55 l/m (2.0 CFM)
Motor size	4000 rpm
Oil capacity	140ml
Intake fittings	1/4” and 3/8”
Weight	3.1kg
Dimensions	190 × 105 × 192 mm

For use on A3 please scan the QR code to read the A3 safety instructions. **DO NOT USE UNLESS FULLY QUALIFIED FOR A3.**

Information correct at time of going to press. Not all products are available in all regions. This document has been translated using AI and may contain inaccuracies.



Hi-Flow Core Removal Tool

The Ultimate Hi-Flow Core Removal Tool is a professional-grade, vacuum and pressure-rated valve core removal accessory designed for HVAC/R service, refrigerant recovery, and system evacuation. By removing restrictive valve cores, it provides true full-flow system access, significantly increasing both recovery and evacuation speed as well as the achievable depth of vacuum. It also allows connection to a vacuum gauge as close as possible to the unit being evacuated. This tool will improve service time on any system that relies on a Schrader valve for refrigerant access.

Key Features & Benefits:

Full-flow valve core removal – Eliminates core restriction for maximum flow, faster recovery/evacuation, and deeper vacuum.
Deep-vacuum rated – Maintains leak-free performance under vacuum conditions.
High-pressure rated – Safe for charging and use with high-pressure refrigerants (e.g. R410A).
Magnetic base / secure handling – Prevents lost valve cores during service.
Core-retention removal mechanism – Securely grips and extracts cores to avoid loss.
Side-port connection – Enables gauges or hoses for evacuation, charging, or testing.
No tools required - Hand tighten only.
Two sizes in one tool - 1/4” and 5/16”.
Refrigerant Ready - Compatible with A1, HFC/HFO, low GWP A2L and A3 refrigerants.

Description	Part No.
Ultimate Hi-Flow Core Removal Tool	JAV-1600

Specification	
Service Port	1/4” female flare (with 5/16” female for mini-split systems)
Core / Side Port	Both ports: 1/4” male flare with removable valve core
Vacuum Rating	20 microns. Ideal for system evacuation
Maximum Working Pressure	800 psi (approx. 55bar) matching higher pressure refrigerant system requirements (R410a)
Materials & Seals	Select materials compatible with common (e.g. HFC, HFO, A2L, A3) - HNBR O-rings / sealing elements (Super Seals) as well as proprietary PTFE long life ball valve seals
Core-Grip Mechanism	Adjustable tip to securely grab a range of valve core sizes for removal/re-installation
Side Port Functionality	Allows connection of vacuum pump, vacuum gauge or changing hose
Compatibility	Refrigerants including HFC, HFO, A2L & A3, recovery and evacuation

Information correct at time of going to press. Not all products are available in all regions. This document has been translated using AI and may contain inaccuracies.

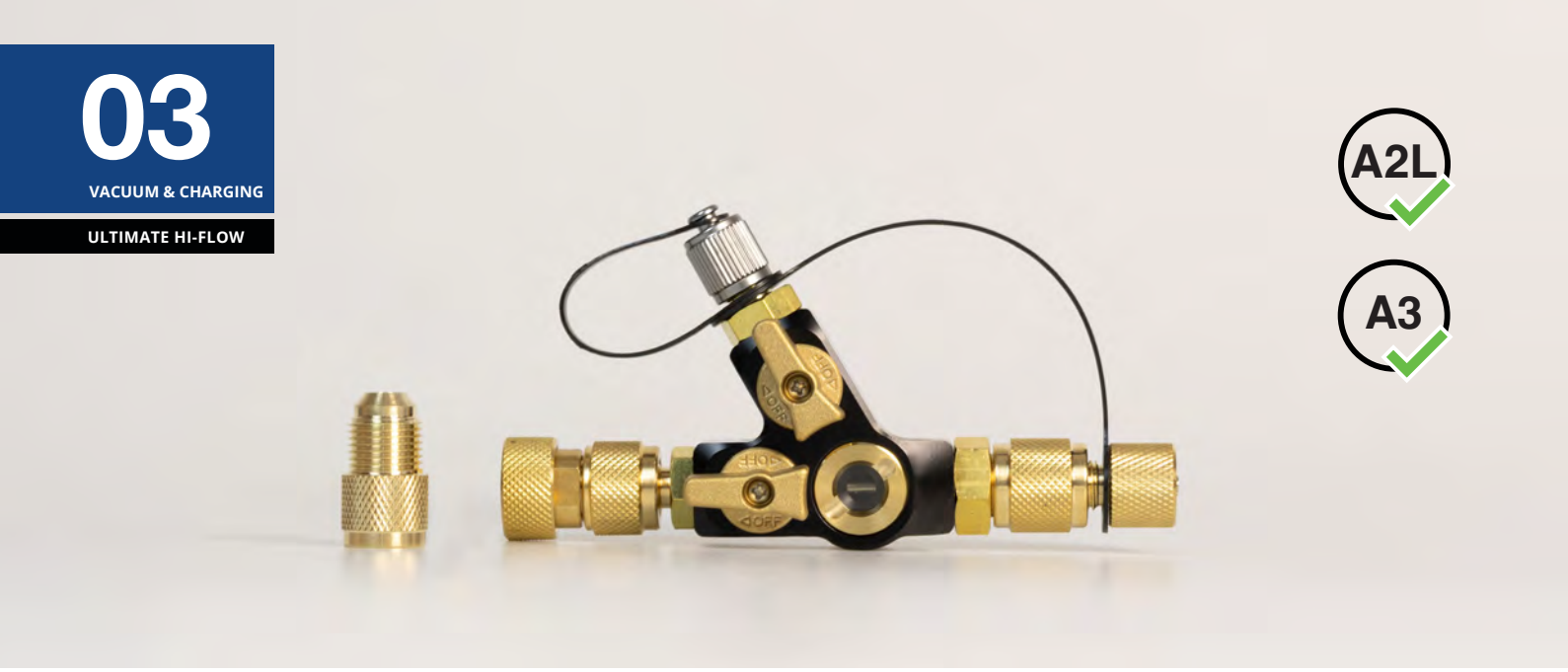

Hi-Flow Core Removal Y Tool

Dual Valve with Sight Glass

The Ultimate Hi-Flow Core Removal Y Tool with Sight Glass and Dual Valve is a professional-grade, vacuum and pressure-rated valve-core removal accessory engineered for HVAC/R service, recovery, evacuation and charging tasks. It offers dual-valve functionality, high speed Y flow path for increased flow and a sight glass to witness core removal and installation as well as the safe control of refrigerant during system recovery and charging. Designed to speed up refrigerant recovery, evacuation, charging, reduce tool count, and improve workflow efficiency for technicians working on a wide range of systems.

Key Features & Benefits:

Dual-Valve with Side Port Isolation – Built-in ball valve isolates gauges or hoses for safer, more flexible servicing.
Y-Configuration – Creates linear flow for faster evacuation, recovery, and charging.
Sight Glass – Monitor core removal and refrigerant flow during service.
Full-Flow Core Removal – Eliminates restrictive valve core for maximum flow.
Deep Vacuum Rated – Leak-free performance under vacuum conditions. (20 microns)
Swappable Fittings – 1/4" standard and 5/16" for mini-splits for broad compatibility.
Core-retention removal mechanism – Securely grips and extracts cores safely.
Refrigerant-Ready – Compatible with A1, HFC/HFO, low-GWP A2L/A3 refrigerants.
Two Active Lines - Speed up system evacuation and refrigerant reclaim
Optimised Flow Paths - Large bore internal passages engineered for higher linear flow.

Description	Part No.
Ultimate Hi-Flow Core Removal Tool Y Tool Dual Valve	JAV-1601

Specification	
Service Port	1/4" female flare (5/16" female fitting for mini-split fitting applications)
Side Port/Core Removal Port	Both ports: 1/4" male flare with ball valve isolation
Vacuum Rating	20 microns. Ideal for system evacuation
Maximum Safe Working Pressure	800 psi (approx. 55bar) matching higher pressure refrigerant system requirements (R410a)
Material & Seals	Select materials compatible with common refrigerants (e.g. HFC, HFO, A2L, A3) - HNBR O-rings / sealing elements (Super Seals) as well as proprietary PTFE long life ball valve seals.
Handling/User Interface	Large rod/spinner for core removal; secure core retention; easy swap fitting design for 1/4" & 5/16"
In the box	Tool with additional 1/4" & 5/16" adaptor and standard 1/4" & 5/16" tethered fitting
Compatibility	Refrigerants including HFC, HFO, A2L & A3, recovery and evacuation

Information correct at time of going to press. Not all products are available in all regions. This document has been translated using AI and may contain inaccuracies.



JAV-1603 JAV-1602 JAV-1604

Hi-Flow Y Fitting Series

JAVAC EDGE 1 A3 A2L

The Ultimate Hi-Flow Y Fitting Series are high preformance vacuum rated Y adaptors built for HVAC/R evacuation, recovery and charging operations. Each one is designed to provide unrestricted high flow paths and flexible hose connections. Each of the three size combinations available enable engineers to connect multiple hoses to a single point - ideal for complex systems, multi port manifolds or multi hose recovery set ups.

Specification	
Body Material	Aircraft grade aluminium - for strength, light weight and corrosion resistance, with solid brass connectors and flare faces
Connection Types	Two 3/8” male flare branches. Female flare swivel - branch size varies by model (3/8”, 1/4” or 1/2”)
Internal Bore/ Flow Path	Large internal diameter branches engineered for high linear flow
Vacuum Rating	20 microns suitable for deep system evacuation.
Maximum Safe Working Pressure	800 psi (approx. 55bar) matching higher pressure
Material & Seals	High-quality solid brass flare sealing elements suitable for refrigerants (HFC, HFO, A2L, A3) and HNBR Super Seals.
Finish/Coating	Durable anodized finish to resist oxidation/ corrosion - Ideal for field use in varied environments

Description	Part No.
Ultimate Hi-Flow Y Fitting Series	JAV-1602/1603/1604

Part Number	Connection Size	Usage
JAV-1602	3/8” x 3/8” x 3/8”	Hi-flow Y for systems where all connections are 3/8”
JAV-1603	3/8” x 3/8” x 1/4”	For set ups calling for 1/4” connection on vacuum pumps or reclaim units
JAV-1604	3/8” x 3/8” x 1/2”	For setups calling for a 1/2” connection for larger vacuum pump connections

Key Features & Benefits

Unrestricted Flow – High linear flow design for maximum throughput, significantly speeding up evacuation and recovery.
Deep Vacuum Rated (20 microns) – Leak-free performance, crucial for reliable evacuation.
High-Pressure Compatible – Engineered for use with high pressure refrigerants (R410a).
Multi-Hose Connection – Safe multi hose connection simplifying hose managment.
Durable Build – Aluminium body, brass flare faces, and HBNR seals for long-term reliability.
Compact Design – Y-shaped form fits easily into tight spaces.

Information correct at time of going to press. Not all products are available in all regions. This document has been translated using AI and may contain inaccuracies.



Hi-Flow Bi-Valve Y Branch

The Ultimate Hi-Flow Bi-Valve Y Branch is a heavy-duty, vacuum and pressure-rated Y adapter fitting for HVAC/R applications. Designed to provide maximum flow capacity and flexible hose routing while also offering valve isolation for improved control and convenience. The bi valve configuration enables independent control of each of the two male flare branches, giving technicians greater flexibility when evacuating, charging, or servicing refrigerant systems.

Key Features & Benefits

Dual-Valve Design – Independent valves on each male flare branch for easy isolation and flow control.
Full-Flow Passage – Maximised bore size for faster evacuation, recovery, and charging.
Vacuum & Pressure Ready – Handles deep vacuum and high-pressure refrigerants reliably.
Flexible Hose Setup – Connect multiple hoses to one port for complex systems.
Durable Build – Aircraft-grade aluminium and brass for long life and corrosion resistance.
Compact Design – Y-branch form reduces bulk compared to traditional manifolds.

Description	Part No.
Ultimate Hi-Flow Bi-Valve Y Branch	JAV-1605

Specification	
Body Material	Aircraft grade aluminium - for strength, light weight and corrosion resistant, with solid brass connectors and flare faces
Connection Types	Two 3/8” male flare connections and one 3/8” female flare connection.
Internal Bore/ Flow Path	Enlarged and optimised internal flow paths giving high linear flow
Vacuum Rating	Deep vacuum (20 microns)
Maximum Safe Working Pressure	800 psi (approx. 55bar) matching higher pressure refrigerant system requirements
Valve type	Ball valves with long life proprietary PTFE seals
Material & Seals	High-quality flare connections and HNBR (Super seals) compatible with standard refrigerants (A1, HFC/HFO, A2L & A3)

Hi-Flow Tool Spares Kit



Description	Part No.
Ultimate Hi-Flow Tool Spares Kit	JAV-1610

Kit contains: HNBR O rings to suit the full range. One to service the 1/2” port, and two each to suit 3/8”, 5/16” and 1/4” applications. Spare Caps to suit 5/16” and 1/4” ports (one of each size)

Information correct at time of going to press. Not all products are available in all regions. This document has been translated using AI and may contain inaccuracies.



JAV-1609 JAV-1608

Hi-Flow Access T Fitting

The Ultimate Hi-Flow Access T Fittings are vacuum and pressure rated T adaptor designed for HVAC/R service, charging, evacuation or diagnostic work. Available in two sized they provide a compact and low loss access point for gauges, vacuum pumps or reclaim units. With their light and compact design they are ideal to tap into a system without the need for bulky manifolds or unnecessary extra hoses.

Part Number	Connection Size	Typical Usage
JAV-1608	1/4” female flare 1/4” male flare 1/4” male flare side port	Standard service fittings and systems using 1/4” flare connections
JAV-1609	5/16” female flare 5/16” male flare 5/16” male flare side port	For systems using larger 5/16” service fittings - especially in mini-split applications

Key Features & Benefits

Low-Loss Charging T – Enables charging, evacuation, or diagnostics with minimal refrigerant loss—no bulky manifold needed.
Side Port – Quick connection for gauges, pumps, or hoses without disconnecting the main service port.
Vacuum & Pressure Rated – Safe for deep vacuum and high-pressure operations (up to 800psi / 55bar).
Compact Design – Ideal for use in tight spaces.
Efficient Access – Simplifies hose management and speeds up work in any environment.

Description	Part No.
Ultimate Hi-Flow Access T Fitting	JAV-1608/1609

Specification	
Body Material	Aircraft-grade aluminium for strength, light weight, and anodised for corrosion resistance
Both Male Ports	1/4” or 5/16” male flare connection for gauges or service hose attachment
Maximum Safe Working Pressure	800psi (/ 55bar) matching higher pressure refrigerant system requirements (R410a)
Material & Seals	High-quality flare connections and HNBR (Super seals) compatible with standard refrigerants (A1, HFC/HFO, and where applicable A2L & A3)
Vacuum Capability	Engineered for deep vacuum operations (20 microns rated)
Finish/ Coating	Durable finish or coating to resist wear, corrosion and optimise field lifespan

Information correct at time of going to press. Not all products are available in all regions. This document has been translated using AI and may contain inaccuracies.



JAV-1606 JAV-1607

Hi-Flow Core Depressor Tool

The Ultimate Hi-Flow Core Depressor Tools - precision engineered vacuum and pressure rated core depressor accessories for HVAC/R service. Available in two size combinations, they enable safe and controlled valve core depresssion on Schrader fittings. Ideal when charging, recovering or servicing refrigerant systems and minimising refrigerant loss, protecting equipment and removing the risk of user front burns.

Specification	
Side-Port/ Hose/ Gauge Connection	JAV-1606 - 1/4” flare connections for Schrader valve and service hose attachment. JAV-1607 - 5/16” flare connections for Schrader valve and service hose attachment.
Vacuum Rating	Deep vacuum capable (20 microns)
Maximum Safe Working Pressure	High-pressure rated (up to 800 psi/55 bar) - safe for higher-pressure refrigerants (R410a)
Seals/ Internal Components	High-quality O-rings / back-seat seals compatible with modern refrigerants (HFC, HFO, A2L, A3)
Body Material	Aircraft-grade aluminium - for strength, corrosion resistance, and longevity

Description	Part No.
Ultimate Hi-Flow Core Depressor Tool	JAV-1606/1607

Part Number	Connection Size	Typical Usage
JAV-1606	1/4” female flare 1/4” male flare side port	Schrader valve for connection of gauges or service hoses
JAV-1607	5/16” female flare 5/16” male flare side port	Schrader valve for connection of gauges or service hoses

Key Features & Benefits

Accurate Core Control – Smooth, precise core depression for negligible refrigerant loss while eliminating the risk of user frost burn.
Vacuum & Pressure Rated – Reliable under deep vacuum and high-pressure conditions. (20 microns)
Low-Loss Side Port – Connect gauges or hoses with negligible discharge for diagnostics and charging.
Durable Build – High-quality aluminium, brass, and HNBR seals for long-term reliability.
Compact Design – Ideal in tight spaces.

Information correct at time of going to press. Not all products are available in all regions. This document has been translated using AI and may contain inaccuracies.



Hi-Flow Hose

End Ball Valve 1/4” SAE x 45° R/B/Y

The Hi-Flow Hose End Ball Valve range has been specifically engineered to deliver maximum refrigerant flow while improving accessibility in confined installation and service environments. Featuring a 45° angled design, large bore internal passages and a premium all-metal construction, these valves provide reliable performance during charging, recovery and evacuation procedures.

Manufactured from aircraft-grade anodised aluminium for long-term durability, each valve incorporates a specially engineered PTFE ball seal and deep vacuum rated connector to ensure dependable operation across a wide range of applications. Available in red, blue and yellow colour options for quick identification and fully compatible with A2L and A3 refrigerants.

Key Features & Benefits:

- 45° male connection for easier access in tight spaces.
- Large bore internal passages for optimised flow.
- Deep vacuum rated connector with enhanced sealing.
- Aircraft-grade anodised aluminium construction.
- Long-life ball valve assembly.
- Specially engineered PTFE ball seal.
- Colour-coded identification.
- A2L and A3 refrigerant compatible.
- Adjustable flow control.
- Durable all-metal construction.

Description	Part No.
Hi-Flow Hose End Ball Valve 1/4” SAE x 45° Red	JAV-1615
Hi-Flow Hose End Ball Valve 1/4” SAE x 45° Blue	JAV-1616
Hi-Flow Hose End Ball Valve 1/4” SAE x 45° Yellow	JAV-1617
Hi-Flow Hose End Ball Valve - Set of 3 (R/B/Y)	JAV-1618



Information correct at time of going to press. Not all products are available in all regions. This document has been translated using AI and may contain inaccuracies.



Core Caddy

With 3 Cores

The Core Caddy is a practical two-in-one service tool designed to simplify valve core removal, installation and storage. The integrated steel keyway allows engineers to quickly and securely remove and refit valve cores, even when working in difficult-to-access locations.

Designed to minimise the risk of dropped, lost or damaged valve cores, the secure retention system holds the core firmly during servicing. For added convenience, the handle incorporates internal storage for spare valve cores, with three spare cores supplied as standard, ensuring replacements are always close at hand when required.

Description	Part No.
Core Caddy	JAV-1619

Key Features & Benefits

- Two-in-one valve core service tool.
- Steel keyway for easy core removal and installation.
- Secure core retention during servicing.
- Prevents loss or damage of valve cores.
- Integrated storage compartment within handle.
- Supplied with three spare valve cores.
- Compact and convenient design.
- Ideal for servicing in confined spaces.
- Improves service efficiency.
- Reduces downtime during repairs.

Information correct at time of going to press. Not all products are available in all regions. This document has been translated using AI and may contain inaccuracies.



Hose Hanger

The Hose Hanger is an innovative storage solution engineered to organise service hoses while helping to prevent contamination during transport and storage. By connecting hose fittings directly to the corresponding closed-end fittings on the hanger, valuable hoses remain protected, clean and ready for use.

Its industry-leading design accommodates multiple connection types within a single tool, providing compatibility with 1/4”, 3/8” and 1/2” hose fittings. Manufactured from aircraft-grade anodised aluminium, the Hose Hanger delivers exceptional durability and long service life in demanding working environments.

Description	Part No.
Hose Hanger	JAV-1620

Key Features & Benefits

- Organises hoses during storage and transport.
- Helps prevent contamination of hose fittings.
- Protects valuable service hoses.
- Compatible with 1/4”, 3/8” and 1/2” connections.
- Industry-leading multi-size design.
- Aircraft-grade aluminium construction.
- Durable anodised finish.
- Quick and simple hose storage.
- Improves workshop and van organisation.
- Built for long-term professional use.

Information correct at time of going to press. Not all products are available in all regions. This document has been translated using AI and may contain inaccuracies.





Safety Swivel
One-touch design

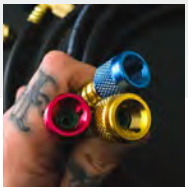

*

Safe Seal

CHARGING HOSES

Patented Safe Seal technology: 'One-Touch' design allows you to screw the fitting on to the system before starting refrigerant flow, avoiding refrigerant loss and risk of 'refrigerant burn'. Then simply turn the knob to start/stop flow.

- 72" hose (183cm), Suitable for standard refrigerants.
- The safety swivel sleeve allows free rotational movement of the hose without the fitting coming loose being put under unnecessary strain and preventing unwanted leaks

Description	Part No.
Charging Hoses, Safe Seal, 1/4", Working Pressure: 600/3000 PSI (41 bar) Bursting pressure of 3000 psi (207 bar)	JAV-1071
R410A/R32 Charging Hoses, Safe Seal, 1/4" x 5/16", Working Pressure: 800/4000 PSI (55 bar). Bursting pressure of 4000 psi (276 bar)	JAV-1072

Safe Seal Hose Gaskets	Part No.
Safe Seal Gasket Manifold End 1/4" (10 pack)	JAV-1374
Safe Seal Gasket Serve End 5/16 x 1/4" (10 pack)	JAV-1276
Safe Seal O-ring for 5/16"	JAV-1355
Safe Seal O-ring for 1/4"	JAV-1354

*Photo credit @hvac_spark

Information correct at time of going to press. Not all products are available in all regions. This document has been translated using AI and may contain inaccuracies.



Turbo Flow

VACUUM AND CHARGING HOSES

JAVAC EDGE 1 A3 A2L

- Large bore vacuum and charging hose
- Designed specifically to increase speed, flow and efficiency when using vacuum pumps and refrigerant charging via the 3/8th access fittings
- Available in 60” (1525mm) and 72” (1828.8mm) lengths
- Connections: 3/8” x 3/8” and 3/8” x 1/4”
- Teflon sealed
- Used for all vacuum and refrigerant charging procedures

Length	Part No.
72” 3/8 Vacuum Hose	JAV-1362
60” 3/8 Vacuum Hose	JAV-1363
72” 3/8 x 1/4 Vacuum Hose	JAV-1364
60” 3/8 x 1/4 Vacuum Hose	JAV-1365

Max working pressure	55 Bar
Burst Pressure	275 Bar
Core depressor	No
Ball valve	No
Colour	Black

NEW! Gaskets	**Part No.**
JAVAC Edge Teflon Gaskets 3/8” T Flow (10 pack)	JAV-1374

Information correct at time of going to press. Not all products are available in all regions. This document has been translated using AI and may contain inaccuracies.



JAV-1550
1/2” Increased bore size – faster and deeper vacuum

1/2” Turbo Flow

VACUUM AND CHARGING HOSE

Faster, Deeper Vacuum – The oversized 1/2” bore hose increases flow rate, allowing for deeper and quicker vacuum drastically reducing system evacuation time.

Universal Compatibility – Works with any vacuum pump that has a 3/8” connection for seamless integration into your workflow.

High-Pressure Ready – Designed to handle all high-pressure refrigerants without collapsing or permeating under vacuum pressure.

Optimized for All Refrigerants – Ensures efficient system charging and evacuation across standard HVAC refrigerants.

Description	Part No.
1/2” 3/8 x 1/4 Vacuum Hose, 72” long	JAV-1550

Connections	1/4” and 3/8” SAE
Max. Working Pressure	44 Bar / 650 PSI
Min. Burst Pressure	222 Bar / 3200 PSI
Material	4 Ply Hose; HNBR Neoprene Seals
Vacuum Rated	Up to 20 Microns
Length	72”

Information correct at time of going to press. Not all products are available in all regions. This document has been translated using AI and may contain inaccuracies.



JAV-1375

Hose Sets

NO BALL VALVE, STANDARD & SET BACK

JAVAC 1

- Red/Yellow/Blue
- Temperature rating -30 to +95 oC



JAV-1381

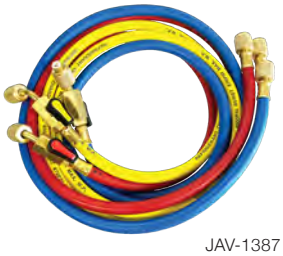

JAV-1387

Part No.	Length / Type / Connections	No Ball Valve	Ball Valve Set Back	Standard Ball Valve	Burst pressure rating / Max working pressure Bar
JAV-1375	72” hose set 1/4” x 1/4”	✓	–	–	
JAV-1376	60” hose set 1/4” x 1/4”	✓	–	–	3000 PSI/206 / 600 PSI/41
JAV-1377	36” hose set 1/4” x 1/4”	✓	–	–	
JAV-1378	72” hose set R410a 1/4” x 5/16”	✓	–	–	
JAV-1379	60” hose set R410a 1/4” x 5/16”	✓	–	–	4000 PSI/275 / 800 PSI/55
JAV-1380	36” hose set R410a 1/4” x 5/16”	✓	–	–	
JAV-1381	72” hose set 1/4” x 1/4”	–	✓	–	
JAV-1382	60” hose set 1/4” x 1/4”	–	✓	–	3000 PSI/206 / 600 PSI/41
JAV-1383	36” hose set 1/4” x 1/4”	–	✓	–	
JAV-1384	72” hose set R410a 1/4” x 5/16”	–	✓	–	
JAV-1385	60” hose set R410a 1/4” x 5/16”	–	✓	–	4000 PSI/275 / 800 PSI/55
JAV-1386	36” hose set R410a 1/4” x 5/16”	–	✓		
JAV-1387	72” hose set 1/4” x 1/4”	–	–	✓	
JAV-1388	60” hose set 1/4” x 1/4”	–	–	✓	3000 PSI/206 / 600 PSI/41
JAV-1389	36” hose set 1/4” x 1/4”	–	–	✓	
JAV-1390	72” hose set R410a 1/4” x 5/16”	–	–	✓	
JAV-1391	60” hose set R410a 1/4” x 5/16”	–	–	✓	4000 PSI/275 / 800 PSI/55
JAV-1392	36” hose set R410a 1/4” x 5/16”		–	✓	
JAV-1366	Teflon gaskets for 1/4” & 5/16” Pack of 10				

Gasket Picker

JAVAC 1



Description	Part No.
Gasket Picker	JAV-1367

Information correct at time of going to press. Not all products are available in all regions. This document has been translated using AI and may contain inaccuracies.



Supahose

STAINLESS STEEL REFRIGERANT HOSE

JAVAC EDGE 1 A3 A2L

- Flexible PTFE lining surrounded by a braided AISI 304 / EN 1.4301 grade stainless steel wire
- Maximum working pressure of 260 bar
- Temperature Range: up to +260 °C
- 1/4" SAE Connection

Length	Part No.
12" (30,5cm)	120404
15" (38cm)	150404
18" (46cm)	180404
24" (61cm)	240404
30" (76cm)	300404
36" (91,5cm)	360404
48" (122cm)	480404
60" (152,5cm)	600404
78" (198cm)	780404

Information correct at time of going to press. Not all products are available in all regions. This document has been translated using AI and may contain inaccuracies.



TurboFlow Vacuum & Charging Kit

VETO + JAVAC EDGE ALL IN ONE BAG

This complete charging and evacuation kit, is designed to handle all high-pressure referigerants and not to collapse or permeate under vacuum pressure.

- Truly universal to work with any vacuum pump with a 3/8" connection
- All products are vacuum rated so no leaks can occur when in ultimate vacuum
- All products are restriction free for complete TurboFlow state
- Significantly reduce evacuation times compared to a set up with a manifold and ¼" hoses
- Can be used on all standard refrigerants to efficiently and quickly charge HVAC systems
- All items available available to buy seperately

Description	Part No.
TurboFlow Vacuum and Charging Kit	JAV-1422

Kit includes: 2 x JAV-1364 TurboFlow 3/8" FL to ¼" FL black vacuum and charging hoses; 2 x EL41550 TurboFlow JAVAC core removal tools ¼" as standard with 5/16" adaptor; 1 x JAV-1415 JAVAC Edge Veloci-Tee 3/8" Vacuum and Charge Tee; 3/8"MF on the run; 1 x AX3685 Veto Pro Pac Hose Hauler bag

Hose Hauler Bag (AX3685) specifications	
Size (w/d/h)	430x130x430 mm
Weight (empty)	1.8kg
Storage/pockets	6 x pockets;1 x removeable parts/gauges bag
Max. Payload	7kg
Internal volume	50.5L


AX3685


EL41550


JAV-1415


JAV-1364

Information correct at time of going to press. Not all products are available in all regions. This document has been translated using AI and may contain inaccuracies.



Manifold kit

Safe Seal Hoses

Manifolds

JAVAC EDGE 1 5

Brand new range of manifolds, available as two and four valve in standalone and kit configurations. R410a, R32, R600a and R290 variants are fully A3 compatible.

All manifolds:

- 1/4 turn control valves for fast operation and increased refrigerant flow
- Piston style, Smart Spring valves to ensure perfect sealing
- Sight glass
- Forged aluminium body – durable and lightweight
- 80mm gauge heads with rubber protection surround
- Aluminium Valve Knobs for increased damage resistance
- JAVAC Edge Manifold hanging strap with strong magnet
- Available as manifold only or as a kit

Manifold Kit:

- Manifold
- JAVAC Edge 72" Safe Seal Hoses*
- Robust carry case with laser cut foam protection & manual

Gas	Product	Valve	Part No.
Multi Gas, R134A, R22, R404A, R407C	Manifold Only	2	JAV-1219
	Manifold Kit	2	JAV-1218

Gas	Product	Valve	Part No.
A3, R410a, R32, R600a, R290	Manifold Only	2	JAV-1217
	Manifold Kit	2	JAV-1216

Information correct at time of going to press. Not all products are available in all regions. This document has been translated using AI and may contain inaccuracies.



Torr Gauge

JAVAC

- Stainless Steel construction
- Blow out plug for over pressure protection (available as a spare Part No. CR2-PLUG)

Description	Part No.
Torr Gauge	CR2-40

Accuracy	Class 2
Units	Torr, mbar
Operating pressure range	0 - 40 Torr / 50 mbar
Connector type	1/4” Flare connection
Diameter	100mm

Vacuum Pump Oil

JAVAC

- Designed for rotary vane vacuum pumps
- Maximises performance and increases depth of vacuum
- Contains additives to improve the anti wear performance, oxidisation resistance, corrosion protection, pour point (cold starting), air release and anti foaming tendencies
- Low lacquer & carbon forming tendency ensuring cleaner systems
- Excellent corrosion resistance
- Improved sealing and mechanical efficiency
- High film strength. Minimal oil carry-over



Description	Part No.
Universal Oil 1 L	HV68/1
Universal Oil 4 L	HV68/4

Information correct at time of going to press. Not all products are available in all regions. This document has been translated using AI and may contain inaccuracies.





5° bend ¼ flare female connector connects directly onto the system allowing for a more accurate reading

Digital Vacuum Gauge

Patented vacuum gauge technology* enables the highest accuracy possible in a micron gauge.

- Small and mighty. Pocket size, measuring only 110mm tall
- Automatic oil sensor
- 'Calibration self-check' function tells the user when and if re-calibrationis necessary
- Instantaneous warm-up and response time
- 'Leak Rate Indicator' & 'Programmable Productivity' functions (Evacuation and Rise-Time Analysis) – saving you time by automating the work

Description	Part No.
Digital Vacuum Gauge	JAV-1041

Range	0 - 25,000 Microns (3330 Pa, 33.30 mBar, 25mmHg)
Accuracy	± (5% of Reading
Resolution	1 Micron (0.1 Pa, 0.001
Units	Microns, Pa, mBar,mmHg, Torr
Warm-up Time	Instant
Response Time	Instant
Power	2 x AAA Alkaline Batteries.
Operating temp	-12°C to 50°C
Maximum Overpressure	500 PSI (34.5 Bar)
Dimensions	110 x 33 x 25mm
Weight	77 g including batteries

Information correct at time of going to press. Not all products are available in all regions. This document has been translated using AI and may contain inaccuracies.





Digital Alarm Thermometer

JAVAC 1

- Max/min memory
- Stainless Steel probe 5” with 1 metre cable
- Hold and alarm functions
- Hand size, with detachable probe
- Batteries included

Description	Part No.
Digital alarm thermometer	RT-905

Units	°C, °F
Temperature range	-50 ~ 200°C / -58 ~ 392°F
Power	1 X AAA (included)
Probe size	230 mm
Dimensions	118 mm

Information correct at time of going to press. Not all products are available in all regions. This document has been translated using AI and may contain inaccuracies.



Hydrocarbon Scale

(INC. TWO HOSES AND BALL VALVE)

JAVAC EDGE 1 A3 A2L 5

- Large weighing platform and durable and sturdy injected molded components
- Back-lit LCD display
- High accuracy load cell
- Pass-through charging (moving the charge hose does not affect weight)
- Small diameter durable CLRF Series hoses included
- Charging valve included for precision charging
- Schrader valves included to prevent refrigerant loss/leaks
- Cylinder adapter with Secure Seal low-loss fitting included for inverted charging
- 2 charging orientation options: upright and inverted
- Velcro loop included for stabilizing the refrigerant canister (upright charging)
- Designed for R600a and R290
- Other charging methods are possible by using additional adapters for different canister types

Description	Part No.
Hydrocarbon scale	DS-5000

Capacity (g/oz)	5000g/176oz
Accurac (g/oz)	1g / 0.1oz
Power Supply	2 x AA batteries (included)
Dimensions l x w x h	200 x 150 x 48mm (7.9 x 5.9 x 1.9”)

Hydrocarbon Can Valve

JAVAC 1

- Can valve connection 1/4” SAE outlet
- Suitability R600 and R290 cans



Description	Part No.
Hydrocarbon Can Valve	JAV-1393

Information correct at time of going to press. Not all products are available in all regions. This document has been translated using AI and may contain inaccuracies.





Procharge 100

REFRIGERANT CHARGING SCALE

The Procharge 100 digital refrigerant charging scale is a welcome addition to JAVAC's range of refrigerant service tools. An upgrade on the current best selling Procharge unit.

- Ideal for air conditioning and refrigeration
- This unit is highly accurate with 5 gram resolution and an increased weighing capacity of 100kg. The compact platform is 223mm x 223mm, easily removed from the carry case for use, also featuring an easy to read LCD display
- This unit also includes a memory function, holding the last reading until cleared. Even when the unit automatically shuts down after
  10 minutes of non use, the last reading is still stored in memory

Type	Digital
Weighing capacity	100kg
Accuracy	+/- 0.5%
Resolution	5 g
Power	9 V battery
Battery life	30 hours
Operating temperature	10 to 40ºC
Weight	2.5kg
Dimensions	250 x 250mm

Description	Part No.
Procharge 100	G58610

Information correct at time of going to press. Not all products are available in all regions. This document has been translated using AI and may contain inaccuracies.



UK Only

Nitrogen Regulator 50 Bar (OFN)

JAVAC EDGE 1 5

- 300 bar maximum inlet pressure.
- 0 - 50 bar (0 - 750 psi) outlet pressure range.
- Suitable for testing systems using R410A and all standard refrigerants, in accordance with BS EN 378.
- 1/4” SAE flare outlet connection to allow for rapid connection to industry standard hoses.
- Large pressure adjustment knob to allow for easy pressure adjustment.

Description	Part No.
Nitrogen Regulator 50 Bar (OFN)	RS-750

Max. inlet pressure	300 bar
Outlet pressure range	0 - 50 bar (0 - 750 psi)
Connector type	1/4” outlet flare connection

Information correct at time of going to press. Not all products are available in all regions. This document has been translated using AI and may contain inaccuracies.



UK Only

Nitrogen Rig

PRESSURE TESTING RIG WITH ISOLATION VALVE AND GAUGE

JAVAC EDGE 1 5

A complete testing rig specifically designed for high pressure testing in HVAC/R systems using R410A.

- Designed for testing refrigeration systems that use R410A (in accordance with BS EN 378).
- 1/4" SAE flare outlet connection to allow for rapid connection to industry standard hoses.
- Safety relief valve to prevent regulator over-pressurisation.
- Robust rig that is ideally suited to the rigours of daily use.

Description	Part No.
Nitrogen Pressure Testing Rig	RS-750-RIG

Nitrogen Regulator 50 Bar (OFN)



JAVAC EDGE 1 5

- 300 bar maximum inlet pressure.
- 0 - 50 bar (0 - 750 psi) outlet pressure range.
- Suitable for testing systems using R410A and all standard refrigerants, in accordance with BS EN 378.
- 1/4" SAE flare outlet connection to allow for rapid connection to industry standard hoses.
- Large pressure adjustment knob to allow for easy pressure adjustment.

Description	Part No.
Nitrogen Regulator 50 Bar (OFN) – UK	RS-750-RIG
Nitrogen Regulator 50 Bar (OFN) – FR	JAV-1095
Nitrogen Regulator 50 Bar (OFN) – DE	JAV-1096
Nitrogen Regulator 50 Bar (OFN) – ES	JAV-1097

Max. inlet pressure	300 bar
Outlet pressure range	0 - 50 bar (0 - 750 psi)
Connector type	1/4" outlet flare connection

Information correct at time of going to press. Not all products are available in all regions. This document has been translated using AI and may contain inaccuracies.



Nitrogen Purge Tool

JAVAC EDGE 1

When performing repairs on refrigeration or air conditioning piping, it is important to purge the inside of the pipe with nitrogen to prevent oxidation in the joint area, both before and during the brazing process.

This tool allows you to initiate the PURGE function at a pre-set regulated flow rate. Then, with a simple turn of the control knob, you can switch to the BRAZE function, which adjusts the flow rate to a level ideal for the brazing process.

This feature helps minimize nitrogen usage while also preventing air from entering the system during the repair.

The tool is designed to attach to a standard nitrogen regulator and comes equipped with a 1/4" SAE flare outlet connection, which is compatible with standard HVAC hoses.

Materials of construction	Body: Aluminum Inlet, outlet and internals: Brass
Gas service	Nitrogen (N 2)
Maximum working pressure Outlet Flow Rate	(as indicated on device) 3 L/min (during brazing mode)
Operating temperature	-20°C to +50°C
Weight (kg)	0.110
Dimensions (W,L,D)	38 x 80 x 30 mm
Outlet	1/4" SAE

Description	Part No.
Nitrogen Purge Tool	JAV-1444
Nitrogen Regulator RS-750	RS-750

Information correct at time of going to press. Not all products are available in all regions. This document has been translated using AI and may contain inaccuracies.

Access Valves & Core Tools

JAVAC 1



SU-04



SU-05



S-209

Description	Part No.
Valve core removal tool	S-209
Schrader Valve 1/4”	SU-04
Schrader Valve 5/16” – R410A	SU-05

Ball Valves & Adpators

JAVAC 1



EL33021



EL33023



EL30035 / EL30036

Description	Part No.
Ball Valve R410A 5/16”, 1/4 turn	EL33023
Set of 3 Ball Valves (RBY) 1/4” SAE	EL33021
1/4” female flare x 1/4” male flare auto shut off	EL30035
Adaptor 5/16 to 1/4 for R410A	EL30036

10kg Cylinder Adaptor

JAVAC EDGE 1 A2L



Description	Part No.
10KG Cylinder Adaptor L/H R32	JAV-CA04218

Information correct at time of going to press. Not all products are available in all regions. This document has been translated using AI and may contain inaccuracies.

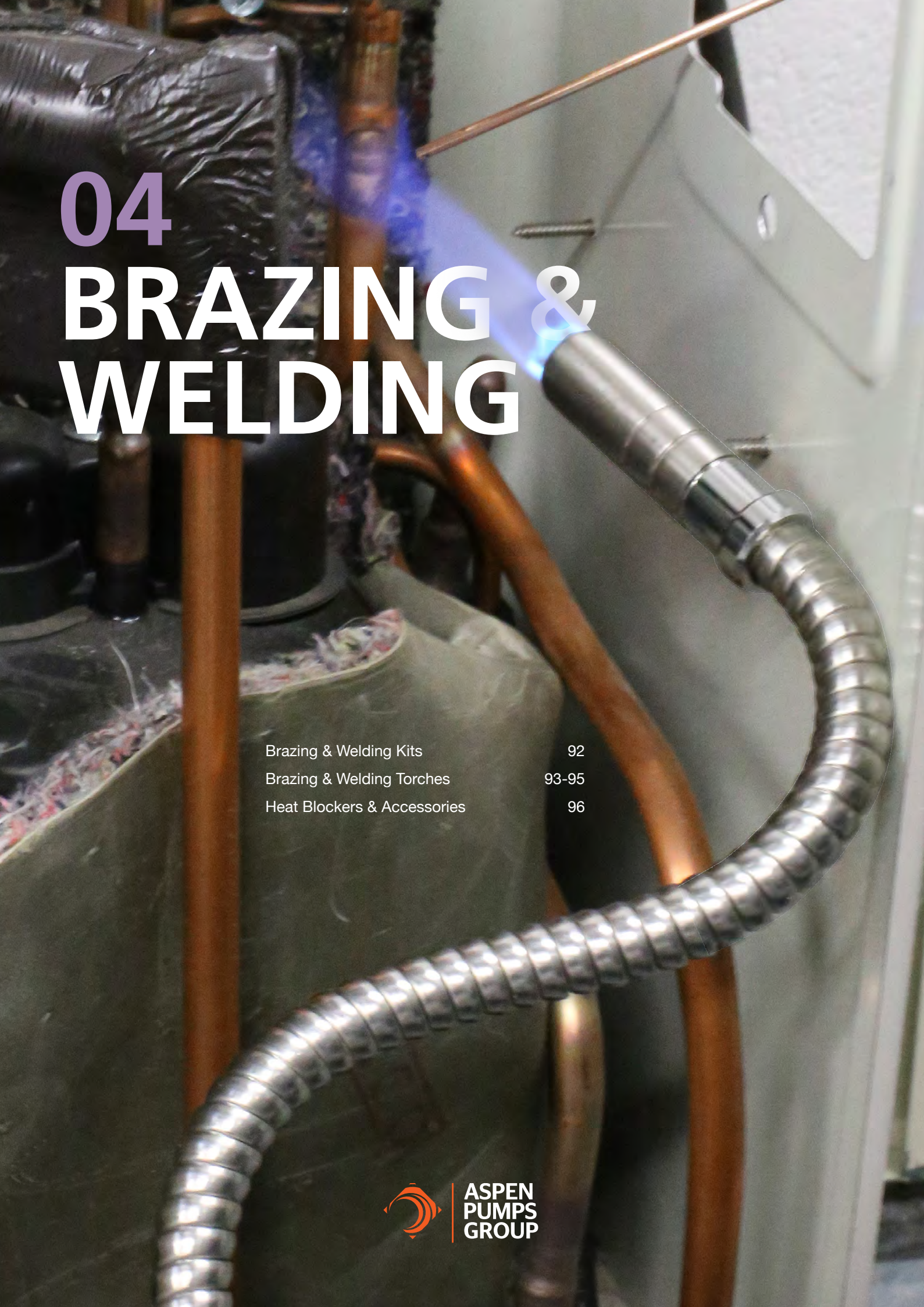

04 BRAZING & WELDING

Brazing & Welding Kits	92
Brazing & Welding Torches	93-95
Heat Blockers & Accessories	96

ASPEN PUMPS GROUP



Oxy-acetylene Brazing & Welding Tool Kit

JAVAC EDGE 1 5

Description	Part No.
Tool kit - FR	JAV-1091
Tool kit - DE	JAV-1092
Tool kit - ES	JAV-1093
Tool kit - IT	JAV-1094

Kit includes:
Oxygen Regulator x 1, Acetylene Regulator x 1, Brazing Torch and Mixer x 1, Pair of 5 m Hoses x 1, Flip Up Brazing Goggles x 1 Lightweight Nozzles (Assorted Sizes) x 1, Pistol Grip Spark Lighter x 1, Cylinder Spanner x 1, Multi Head Spanner x 1 Nozzle Cleaning Set x 1, Pair Of Flashback Arrestors x 1

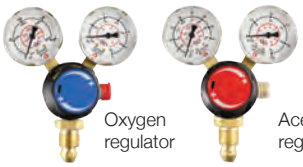
Oxygen regulator
Acetylene regulator


Flashback arrestors


Brazing Torch and Mixer


Pistol Grip Spark Lighter


Cylinder spanner


Pair of 5 m Hoses


Lightweight nozzles


Multi head spanner


Nozzle Cleaning Set

Information correct at time of going to press. Not all products are available in all regions. This document has been translated using AI and may contain inaccuracies.



Olympus

BRAZING & WELDING TORCH

JAVAC 1 5

- Stainless steel nozzle
- Trigger start
- Variable flame control
- 360º swivel tip
- For use with MAPP and Propane gas

Description	Part No.
Olympus	OLY2

S2 Brazing Rods

JAVAC 1

- Premium grade S2 self-fluxing solder copper phosphorus alloy brazing rods
- Suitability copper-copper and high copper content alloys
- Melting range Solidus - 645°C, Liquidus - 850°C
- 1kg Pack. 500mm long
- Made in the UK

Description	Part No.
Brazing Rods	JAV-S2



Information correct at time of going to press. Not all products are available in all regions. This document has been translated using AI and may contain inaccuracies.



Fusion Dual

BRAZING & WELDING TORCH

JAVAC 1 5

- Stainless steel nozzle
- Manual ignition
- Double barrel
- Variable control swirl flame
- For use with MAPP & Propane Gas
- High temperature, faster brazing
- 360° Swivel Tip

Description	Part No.
Fusion Dual	FD-2

Bottle Trolley

JAVAC 1



Description	Part No.
Oxygen and Acetylene Bottle Trolley 5 & 10L	9431380

Information correct at time of going to press. Not all products are available in all regions. This document has been translated using AI and may contain inaccuracies.



Flexi Torch

BRAZING & WELDING TORCH

JAVAC

- Trigger start ignition
- Flexible 205mm stainless steel burner tube
- Access hard to reach places
- Tube stays cool throughout use
- Swirl flame
- For use with MAPP & Propane
- 800 – 1300ºC



Description	Part No.
Flexi Torch	JAV-1104

Information correct at time of going to press. Not all products are available in all regions. This document has been translated using AI and may contain inaccuracies.



Heat Shield

HEAT BLOCKING COMPOUND

JAVAC 1

A reusable putty designed to protect sensitive parts from heat damage during brazing, soldering and welding. No more need for messy wet rags!

- Apply, remove and reuse - up to 40 times!
- Handy colour changing putty shows you when you need to replace the pot.

Description (Boxes of 12)	Part No.
Heat Shield – EN	JAV-1002
Heat Shield – FR	JAV-1051
Heat Shield – DE	JAV-1050
Heat Shield – ES	JAV-1052
Each tub: net weight 325g, 92 x 67mm	

PyroCool®

FLAME RETARDANT GEL

Advanced A

Ready to use

Aerosol

Concentrate

Condensate pump safe

- Protects all surfaces and parts close to brazing, soldering and welding
- Reduces risk of fire by protecting surfaces and dissipating heat
- Suitable for copper, steel and aluminium pipework

Part No.	Product	Qty	Box Qty	Size
S050021	PyroCool	1	8	500ml
S050004	PyroCool	1	8	1L



Information correct at time of going to press. Not all products are available in all regions. This document has been translated using AI and may contain inaccuracies.



05 LEAK DETECTION

Electronic	98-99
Sprays	100
Ultra Violet	101-104

ASPEN PUMPS GROUP



Profind

REFRIGERANT GAS LEAK DETECTOR

JAVAC 2 A3 A2L 5

The Profind refrigerant gas leak detector features a long life solid electrolyte sensor technology that is designed to detect all standard gases including HFC/CFC/HCFC.

- Long life, stable sensor
- Unique numeric leak size indicator
- Automatic calibration and reset to ambient levels
- 3 adjustable sensitivity levels

Description	Part No.
Profind	JAV-1089

Sensitivity	2 g/yr (R32) 1.5 g/yr (R-134A) 0.5 g/yr (R-1234YF) 0.7 g/yr (R-22)
Life of sensor	up to 10 Years
Response time	Instantaneous
Power	4 x AA Alkaline batteries
Battery life	4-6 hours continuous
Warm up time	< 20 seconds
Probe length	432mm
Numerical display	7 segment digital display (1 to 9)
Weight	680g

For use on A3 please scan the QR code to read the A3 safety instructions. **DO NOT USE UNLESS FULLY QUALIFIED FOR A3.**

Information correct at time of going to press. Not all products are available in all regions. This document has been translated using AI and may contain inaccuracies.



Profind+

REFRIGERANT GAS LEAK DETECTOR

JAVAC 2 A3 A2L 5

The PROFIND+ combustible gas leak detector utilises a solid state heated sensor designed for high sensitivity to all Hydrocarbon refrigerants and combustible gases including Methane (Natural Gas), Propane (R-290), Isobutene (R-600A), Butane, (LPG), Ethane (R-170), Acetylene, Methanol, Acetone, Gasoline, Hydrogen and others.

- Long life, stable sensor
- Unique numeric leak size indicator
- Automatic calibration and reset to ambient levels
- 3 adjustable sensitivity levels

Description	Part No.
Profind+	JAV-1090

Sensitivity	5 ppm (Methane)
Life of sensor	up to 300 hours
Response time	Instantaneous
Power	4 x AA Alkaline batteries
Battery life	20 hours continuous
Warm up time	< 10 seconds
Probe length	432mm
Numerical display	7 segment digital display (1 to 9)
Weight	567 g

For use on A3 please scan the QR code to read the A3 safety instructions. **DO NOT USE UNLESS FULLY QUALIFIED FOR A3.**

Information correct at time of going to press. Not all products are available in all regions. This document has been translated using AI and may contain inaccuracies.

RTU® BU

BUBBLE-UP LEAK DETECTOR

Ready to use
Aerosol
Concentrate
Condensate pump safe

- Specifically designed for refrigerant leaks
- Produces long-lasting bubbles
- Clings to all surfaces

Part No.	Product	Qty	Size
S010173	RTU BU	8	1L

Hazardous transport.



EasyFind®

BUBBLE-UP LEAK DETECTOR

Ready to use
Aerosol
Concentrate
Condensate pump safe

- Specifically designed for refrigerant leaks
- Produces long-lasting bubbles
- Clings to all surfaces

Part No.	Product	Qty	Size
S010350	EasyFind	12	400ml

Hazardous transport.



Advanced

Information correct at time of going to press. Not all products are available in all regions. This document has been translated using AI and may contain inaccuracies.

Injection



PATENTED DYE

2 IN 1 Solution

JAV-1421

Glo Seal™

UV DYE & SEALANT – INJECTION

SPECTROLINE HVAC/R | S-M | NSF

Works to pinpoint the exact location of all leak areas and seals AC&R micro-leaks from the inside.

The Spectroline patented dual pivoting adapter easily switches from 5/16" or 1/4" flare fittings, making it a versatile tool to keep on hand.

- Works with all popular refrigerants and oils
- Non-polymer, oil-soluble formula safe for system components and recovery equipment
- Remains safely in system to help protect against future leaks highly concentrated to see all leaks glowing brightly



JAV-1420

Dosage	Treats (cooling)
10ml	0.5 - 2.5 tons of cooling (1.76 - 8.79 kW)

Description	Part No.
Glo Seal™ 10ml Syringe Injector – Single Use	JAV-1421
Glo Seal™ 10ml Syringe Injector & Adapter	JAV-1420

Kit includes:
2 x Single use syringe injector (10 ml)
1 x Patented dual adapter (1/4" flare - 5/16" flare)

Information correct at time of going to press. Not all products are available in all regions. This document has been translated using AI and may contain inaccuracies.

Injection



JAV-1103



Inject dye with a turn of the handle.

Cool Seal™

AC LEAK SEALANT – INJECTION

SPECTROLINE® HVAC/R | S-M | NSF

Seals micro leaks in condensers, evaporators, o-rings and hoses

- Can add years to older, out-of-warranty AC&R systems that leak small amounts of refrigerant
- Works with all popular refrigerants and oils
- Remains safely in system to help protect against future leaks



JAV-1106



JAV-1103

Description	Part No.
Cool Seal, 1 x 15ml (CS-1CS)	JAV-1103
Cool Seal Kit (CS-100CS)	JAV-1106
Kit includes: *2 x 15ml Cool Seal A/C leak sealer cartridges* *1 x Injector assembly* *1 x 20cm hose assembly with low-loss fitting & check valve* *1 x R-410A adapter; service labels*	

Dosage	Treats (cooling)
15ml	up to14kW
60 ml	up to 56kW

Information correct at time of going to press. Not all products are available in all regions. This document has been translated using AI and may contain inaccuracies.

Injection



PATENTED DYE

JAV-1156 EZ-Ject Complete Kit



Inject dye with a turn of the handle.

EZ-Ject™

FLUORESCENT DYE LEAK DETECTION – INJECTION

SPECTROLINE HVAC/R | M | NSF

The revolutionary way to add fluorescent dyes into air conditioning and refrigeration systems – without the use of additional refrigerant, manifold and additional hoses. No pouring and no refrigerant required for injection.

- Spectroline dyes glow brighter than the competition
- One calibrated cartridge provides exact dosing for multiple systems
- Easily overcomes system pressure up to 450 psi (31 bar)

Dosage	Treats (lubricant / refrigerant)
15ml	up to 7.6L / Up to 11.3kg



JAV-1154



JAV-1155



JAV-1210EZ-25



JAV-1211EZ-50

Description	Part No.
EZ-Ject Complete Kit (SPE-HVLEZE)	JAV-1156
Kit includes: 2 x 15ml EZ-Ject Universal/POE dye cartridge, 1 x Dye injector assembly, 1 x 20cm hose assembly with low-loss fitting & check valve, 1 x R-410A adapter; service labels, 1 x Violet light LED leak detection lamp, 1 x Fluorescence-enhancing glasses, 1 x 60ml Glo-Away Plus dye cleaner, 3 x Drip plugs; Service labels	
EZ-Ject Kit (SPE-EZ100E-CS)	JAV-1154
Kit includes: 2 x 15ml Universal/POE dye cartridge, 1 x Dye injector assembly, 1 x 20cm hose assembly with low-loss fitting & check valve	
Universal/POE dye cartridge (SPE-EZ5E-CS)	JAV-1155
20cm hose assembly with low-loss fitting & check valve	JAV-1210EZ-25
Dye injector assembly	JAV-1211EZ-50

Information correct at time of going to press. Not all products are available in all regions. This document has been translated using AI and may contain inaccuracies.

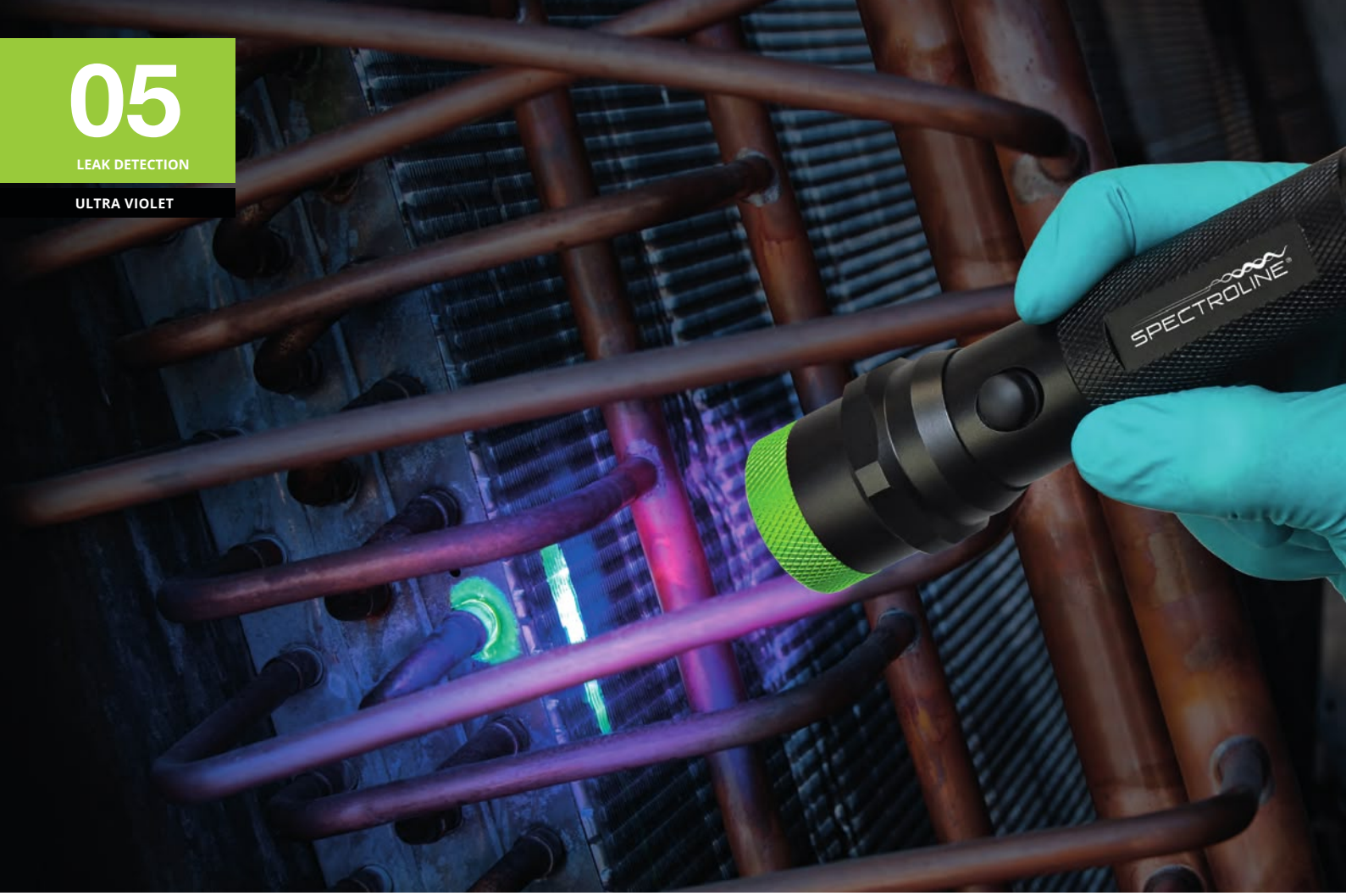

Violet light LED

FLUORESCENT LEAK DETECTION LAMP

SPECTROLINE HVAC/R | 8m



JAV-1176

Economical and powerful, cordless leak detection lamp. Reveals even the smallest refrigerant leaks! Universal/POE dyes only.

- Provides optimal fluorescent dye response and contrast
- Pre-focused beam optimizes fluorescent response
- Compact design easily gets into tight, cramped spaces
- Rugged, corrosion-resistant anodized lamp body delivers years of heavy use
- Anti-roll cuff

Description	Part No.
Violet light LED leak detection lamp (SPE-HVL-CS) *Kit includes:* *1 x Violet Light LED Leak Detection Lamp* *3 x AAA batteries* *1 x Fluorescence-enhancing glasses*	JAV-1176 (SPE-HVL-CS)

Sensitivity	up to 8m
Power	3 x AAA batteries (included)
Run time	up to 5hrs

NOTE: For most applications, our violet light lamp does not require fluorescence enhancing glasses.

Information correct at time of going to press. Not all products are available in all regions. This document has been translated using AI and may contain inaccuracies.

06 BRASS & COPPER FITTINGS



About C&D	106-107
Service Kits	108-110
Smartlock	111-112

ASPEN PUMPS GROUP



C&D VALVE

For more than 20 years, we have engineered industry-leading fittings designed for reliability, durability, and long-term performance. Every product exceeds current standards and is built to withstand the most demanding applications.

Our unmatched warranty is supported by comprehensive technical expertise, helping customers identify root causes, resolve issues efficiently, and achieve better outcomes for all stakeholders. We stand firmly behind our fittings as the best-engineered solution available.

With a comprehensive product range, strong local stock availability, and the fast, dependable delivery Aspen is known for, C&D fittings are the smart, trusted choice for professionals who refuse to compromise. Proven in the toughest environments for over two decades, they deliver performance you can rely on.

Developed by the experts at Sky Refrigeration Limited, these fittings were engineered in Australia - home to some of the harshest refrigeration conditions in the world - ensuring exceptional durability, performance, and reliability in any environment.

Now part of the Aspen Pumps Group, Sky's 20-year legacy of innovation and quality continues, exclusively available across the UK and EU under the C&D brand.

This catalogue provides a comprehensive overview of each fitting, highlighting key features and benefits to give you the knowledge and confidence to sell effectively.

Trusted quality in every connection.

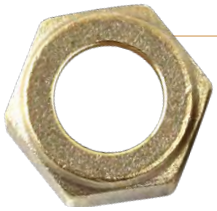



Scan here
for full range:



2026 Catalogue out now!



Information correct at time of going to press. Not all products are available in all regions. This document has been translated using AI and may contain inaccuracies.







Compliance you can count on

C&D Copper & Brass Fittings:

Choosing the right fittings for HVAC/R systems is essential, as high-quality, standards-compliant components have a direct impact on system performance, reliability, and lifespan. C&D copper and brass fittings are engineered and manufactured to meet the highest international standards, providing outstanding strength, precision, and durability. Specifically designed for HVAC/R applications, these fittings deliver secure connections, superior leak resistance, and long-term operational efficiency. Backed by advanced engineering and strict quality control, C&D fittings provide lasting performance and complete peace of mind.



Standards & Compliance:

At C&D, we understand that compliance is key to safety, reliability, and customer trust.
That's why all of our fittings are tested and certified to meet or exceed the latest standards, including:

- **PED 2014/68/EU** – Pressure Equipment Directive
- **EN 12420 CW617N** – Hot-forged brass fittings
- **BS EN 1982:1999** – Machined brass fittings
- **ISO 5149.2** – Refrigerating systems and heat pumps safety requirements
- **EN 14585:2006** – Copper and copper alloy fittings
- **AS5149.2, EN1254-1, EN1254-5, EN14276, EN378-2** - Copper Iron Fittings
- **RoHS Directive** – Full compliance ensuring environmentally safe materials







Information correct at time of going to press. Not all products are available in all regions. This document has been translated using AI and may contain inaccuracies.



Schrader Fittings Kit

Key Features

- Handy refillable case with the most commonly used fittings
- Dedicated kit for Schrader access fittings
- Refill packs available



Complete Kit Part No.	Kit Includes	Refill Pack Part No.	Qty per pack
CD-200-KIT-1	Schrader Union – 1/4" SCHR x 3 Steps 3/16" ID x 1/4" & 3/8" OD includes cap & core	CD-209-0403-3	x 5
	Schrader Union – 1/4" SCHR x 1/4" CU Tail includes tool, cap & core	CD-208-0404	x 5
	Schrader Union Assembly – 1/4" SCHR x 1/8" NPT incl. cap & core	CD-207-0402	x 5
	Schrader Union Assembly – 1/4" SCHR x 1/4" NPT incl. cap & core	CD-207-0404	x 5
	Schrader Union – 410A – 5/16" SCHR – 1/4" CU Tail incl. cap & core	CD-208-0504	x 2
	Schrader Swivel Tee (Brass) – 1/4" FSAE x 1/4" SCHR x 1/4" SCHR incl. cap & core	CD-213-040404	x 2
	Schraeder valve swivel branch 1/4" access T incl. cap & core	CD-214-040404D	x 2
	1/4" Flare Schrader cap no tool	CD-205-4	x 5
	Schrader Valve Core – 410A	CD-204-1	x 10


CD-209-0403-3


CD-208-0404


CD-207-0402


CD-207-0404


CD-208-0504


CD-213-040404


CD-214-040404D


CD-205-4


CD-204-1


Refill packs supplied in euro hook bags

C&D VALVE

Information correct at time of going to press. Not all products are available in all regions. This document has been translated using AI and may contain inaccuracies.



Flare Nut Kit

- Handy refillable case with the most commonly used fittings
- Dedicated kit for flare nuts
- Refill packs available



Complete Kit Part No.	Kit Includes	Refill Pack Part No.	Qty per pack
CD-200-KIT-2	Flared Copper Washer 1/4"	CD-109-04	x 10
	Flared Copper Washer 3/8"	CD-109-06	x 10
	Flared Copper Washer 1/2"	CD-109-08	x 10
	Flared Copper Washer 5/8"	CD-109-10	x 10
	Flared Copper Washer 3/4"	CD-109-12	x 10
	Flare Nut Short Barrel 1/4" FSAE	CD-201-0404	x 10
	Short Barrel Brass Flare Nut – 5/16" FSAE	CD-201-0505	x 10
	Short Barrel Brass Flare Nut – 3/8" FSAE	CD-201-0606	x 10
	Short Barrel Brass Flare Nut – 1/2" FSAE	CD-201-0808	x 6
	Short Barrel Brass Flare Nut – 5/8" FSAE	CD-201-1010	x 2
	Short Barrel Brass Flare Nut – 3/4" FSAE	CD-201-1212	x 2
	Forged Reducing Flare Nut – 3/8" FSAE x 1/4"	CD-201-0604	x 4


CD-109-04


CD-109-06


CD-109-08


CD-109-10


CD-109-12


CD-201-0404


CD-201-0505


CD-201-0606


CD-201-0808


CD-201-1010


CD-201-1212


CD-201-0604


Refill packs supplied in euro hook bags

Information correct at time of going to press. Not all products are available in all regions. This document has been translated using AI and may contain inaccuracies.

Co2 130 Bar Brass & Schrader Kit



- Handy refillable case with the most commonly used fittings.
- Dedicated kit for Schrader access fittings and 130 bar CO2
- Refill packs available



Complete Kit Part No.	Kit Includes	Refill Pack Part No.	Qty per pack
CD-200-KIT-3	Schrader core 130 bar	CD-204-1-HP	x 10
	1/4" SAE Cap 130 bar	CD-275-04	x 10
	3/8" SAE Cap 130 bar	CD-275-06	x 5
	Schrader Union Assy- 1/4 SCHR x 1/8 NPT incl. cap & core 130 bar	CD-207-0402-HP	x 5
	Schrader Union Assy - 1/4 SCHR x 1/4 NPT incl. cap & core 130 bar	CD-207-0404-HP	x 5
	Schrader Union – 1/4 SCHR x 3 Steps 3/16 ID x 1/4 & 3/8 OD incl. cap & core 130 bar	CD-209-0403-3-HP	x 5
	Schrader Union 1/4 Schr (1/4 ID spiggot) 130 bar	CD-209-0404-HP	x 5
	Schrader Union 1/4 Schr (3/8 ID spiggot) 130 bar	CD-209-0406-HP	x 5
	1/4 Schrader x 1/4 SCH x 1/4 FSAE fixed 130 bar	CD-215-040404-XHP	x 4
	1/4MSAE x 3/8 ID solder 130 bar	CD-218-0406	x 4
	Flared Copper Washer 1/4"	CD-109-04	x 10


CD-204-1-HP


CD-275-04


CD-275-06


CD-207-0402-HP


CD-207-0404-HP


CD-209-0403-3-HP


CD-209-0404-HP


CD-209-0406-HP


CD-215-040404-XHP


CD-218-0406


CD-109-04


Refill packs supplied in euro hook bags

Information correct at time of going to press. Not all products are available in all regions. This document has been translated using AI and may contain inaccuracies.

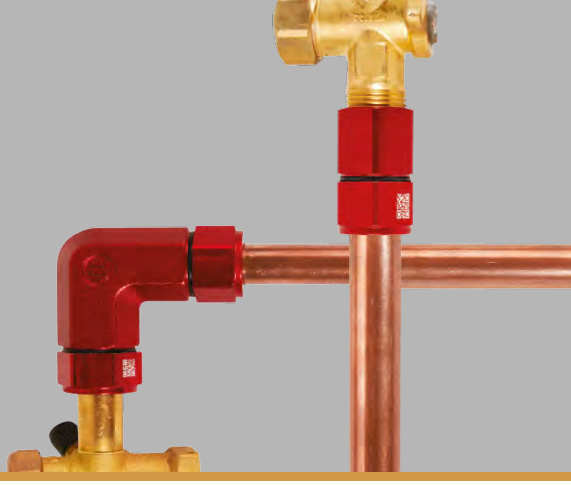

Smartlock

HVAC/R Compression Fitting for all refrigerant lines.

- Positioning strip aligns all components for easy insertion of tube
- Compatible with all refrigerants
- No limit on pressure and temperature range due to metal to metal sealing technology
- Over torque prevention design



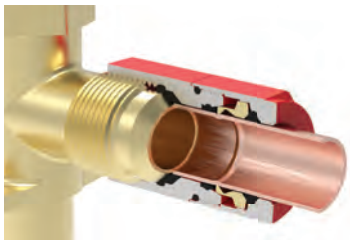

Metal to Metal Seal Technology

- ✔ Vibration dampening
- ✔ Permanent solution
- ✔ 10 year warranty



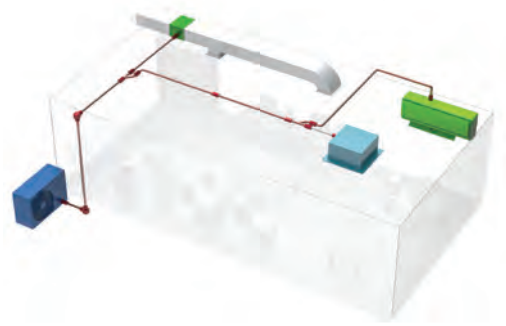

TECHNICAL SPECIFICATIONS	
Materials of construction	Aluminium alloy
Compatible with	ALL refrigerants
Wide temperature range	-40°C to 150°C
Compatible tube materials	Copper tube (hard & soft)
	Aluminium tubes

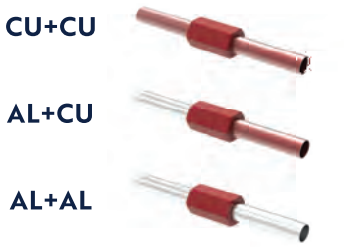

NO

BRAZING | FLARING | WELDING
FIRE HAZARD | HOT WORK PERMIT
SPECIAL GAUGE | SPECIAL TOOL
OXIDATION | NITRO PURGING

ONE SIMPLE SOLUTION

High Pressure Range

SIZE	DESIGN PRESSURE	BURST PRESSURE
1/4"	1700psi	9700psi
3/8"	1600psi	8500psi
1/2"	1300psi	8000psi
5/8"	1300psi	6800psi
3/4"	1000psi	5100psi
7/8"	960psi	4800psi

SMARTLOCK
Brazeless & Flareless Fittings

Information correct at time of going to press. Not all products are available in all regions. This document has been translated using AI and may contain inaccuracies.

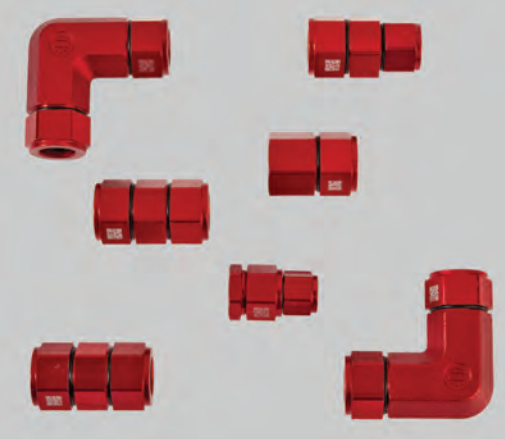

Smartlock

Flare Connector Multi Angle

Size	Part no.
1/4"	FCMA1400
3/8"	FCMA3800
1/2"	FCMA1200
5/8"	FCMA5800
3/4"	FCMA3400



Union Straight

Size	Part no.
1/4"	UNST1400
3/8"	UNST3800
1/2"	UNST1200
5/8"	UNST5800
3/4"	UNST3400
7/8"	UNST7800



Flare Connector Reducer

Size	Part no.
1/2" – 3/8"	FCRS1238



Union Reducer

Size	Part no.
3/8" – 1/4"	UNRD3814
1/2" – 3/8"	UNRD1238
5/8" – 1/2"	UNRD5812
3/4" – 5/8"	UNRD3458
7/8" – 3/4"	UNRD7834



Swage Union

Size	Part no.
3/8"	SWUN3800
5/8"	SWUN5800
3/4"	SWUN3400
7/8"	SWUN7800



Elbow Union

Size	Part no.
1/2"	ELUN1200
5/8"	ELUN5800
3/4"	ELUN3400
7/8"	ELUN7800



Elbow Swage Union

Size	Part no.
3/8"	ELSW3800
5/8"	ELSW5800
3/4"	ELSW3400
7/8"	ELSW7800



SMARTLOCK
Brazeless & Flareless Fittings

Information correct at time of going to press. Not all products are available in all regions. This document has been translated using AI and may contain inaccuracies.

07 SUPPORT & MOUNTING



Rubber Feet	114-117
PVC Mounting Blocks	118
Support Feet	119-121
Heat Pump Kit	122
Metal Frames	123-126
Wall Brackets	127-135
Roof Brackets	136
Anti-Vibration Dampers	137-139
Anti vibration pads & strips	140
Trays	141
Accessories	142

ASPEN PUMPS GROUP

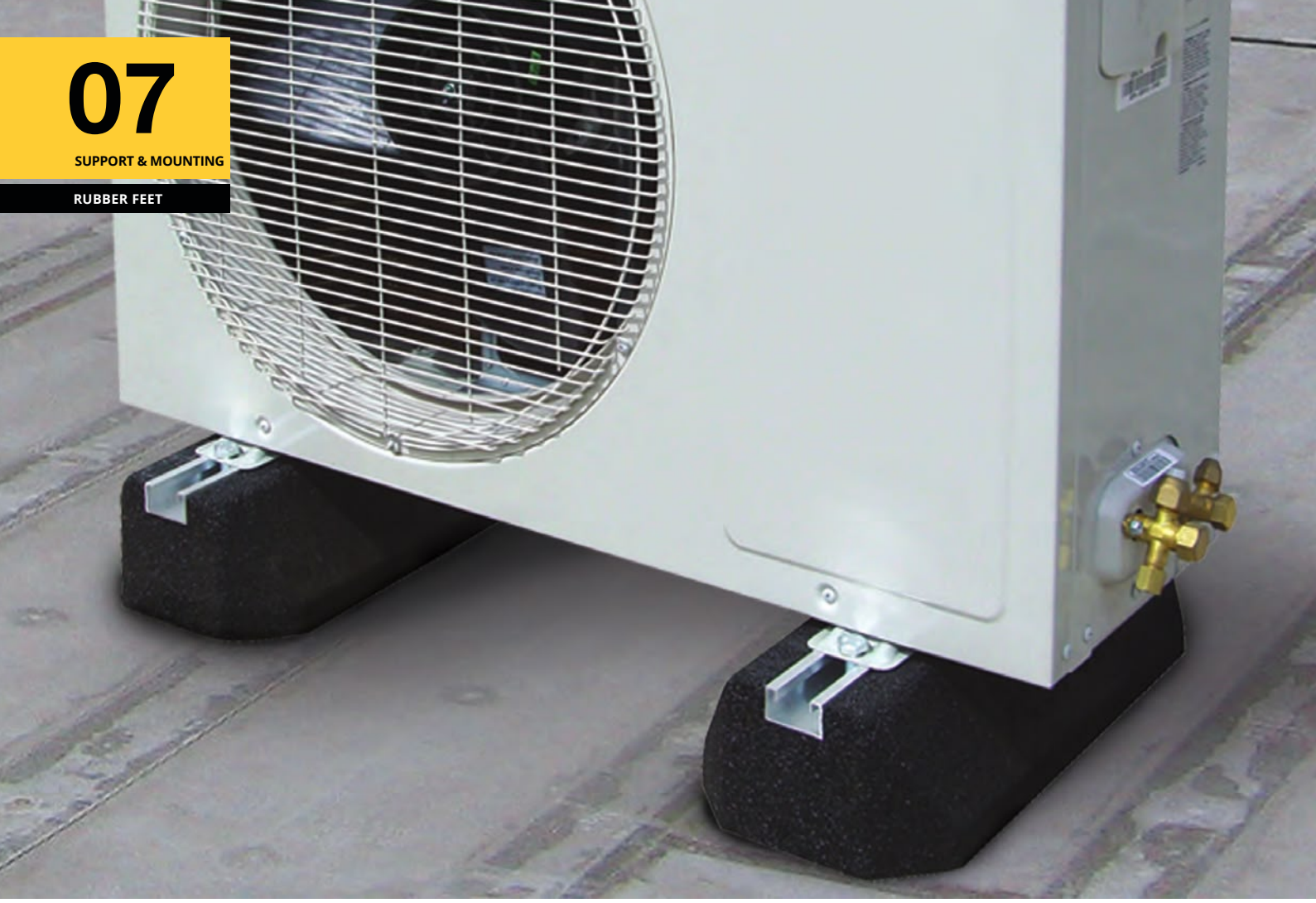

Premium Fix-It Foot

The neat and tidy rubber Fix-it Foot is simple, durable and comes in a variety of sizes. Extra clearance can be created using a High Bloc which fits underneath. Strapped per pair, and including bolt set.

BIG FOOT® SYSTEMS

KEY FEATURES ↓

- ✓ Quick and easy installation
- ✓ Aluminium channel firmly anchored at the top for easy attachment of services.
- ✓ Durable recycled rubber reduces vibration and adds stability.
- ✓ Rail size 40x21mm

Product Code	Size	Profile (mm)	Height (mm)	Width (mm)	Weight (Kg)	Max. Load (Kg)	Pallet Qty
B0084	250	40	95	180	2.4	82	68
B0085	400	40	95	180	3.5	128	60
B0386	600	40	95	180	5.8	224	40
B0134	1000	40	95	180	9.9	295	28





The neat and tidy rubber Fix-it Foot is simple, durable and comes in a variety of sizes. Extra clearance can be created using a High Bloc which fits underneath.

Information correct at time of going to press. Not all products are available in all regions. This document has been translated using AI and may contain inaccuracies.



Fix-it Foot & High Bloc

The neat and tidy rubber Fix-it Foot is simple, durable and comes in a variety of sizes. Extra clearance can be created using a High Bloc which fits underneath.

BIG FOOT® SYSTEMS

KEY FEATURES ↓

- ✓ Quick and simple install.
- ✓ Aluminium channel securely anchored in top for easy fixing of services.
- ✓ Wide range of height and length options available.
- ✓ Durable recycled rubber reduces vibration and adds stability.



Riser

Fix-it Foot



Rubber pair with screw set

KIT INCLUDES ↓

Rubber Foot	× 2
Bag with screws	× 2

Description	Product Code	Length (mm)	Width (mm)	Height (mm)	Weight (Kg)	Max. Load (Kg)	Pair with screw set
250	B6735	250	180	95	2.4	82	
250 – Rubber pair with screw set	B0084						
400	B6736	400	180	95	3.5	128	
400 – Rubber pair with screw set	B0085						
600	B6737	600	180	95	5.8	224	
600 – Rubber pair with screw set	B0386						
1000	B9096	1000	180	95	9.9	295	
1000 – Rubber pair with screw set	B0134						
250 Low	B9043	250	130	50	1.3	82	
400 Low	B9045	400	130	50	2.1	128	
400 Low – Rubber pair with screw set	B0136						
500 Low	B9368	500	130	50	2.5	134	
500 Low – Rubber pair with screw set	B0216						
600 High Bloc	B6974	600	180	120	10.2	224	
1000 High Bloc	B6973	1000	180	120	17.7	295	

Information correct at time of going to press. Not all products are available in all regions. This document has been translated using AI and may contain inaccuracies.

Optima Slim Fix-It Foot



KEY FEATURES ↓

- ✓ Quick and simple install.
- ✓ Aluminium channel securely anchored in top for easy fixing of services.
- ✓ Durable recycled rubber reduces vibration and adds stability.
- ✓ Rail available in two sizes: 40x21mm or 20x15mm

BIG FOOT® SYSTEMS

The neat and tidy rubber Fix-it Foot is simple, durable and comes in a variety of sizes. Strapped per pair, and including bolt set.

Product Code	Size	Profile (mm)	Height (mm)	Width (mm)	Weight (Kg)	Max. Load (Kg)	Pallet Qty
B0085-S20	400	20	95	135	5.7	180	90
B0386-S20	600	20	95	135	8.5	300	66
B0134-S20	1000	20	95	135	13.8	350	48
B0085-S40	400	40	95	135	5.5	160	90
B0386-S40	600	40	95	135	8	265	66
B0134-S40	1000	40	95	135	13	310	48

Information correct at time of going to press. Not all products are available in all regions. This document has been translated using AI and may contain inaccuracies.

SBR AI

100<>500 KG

TITAN SUPPORT SYSTEMS

H100

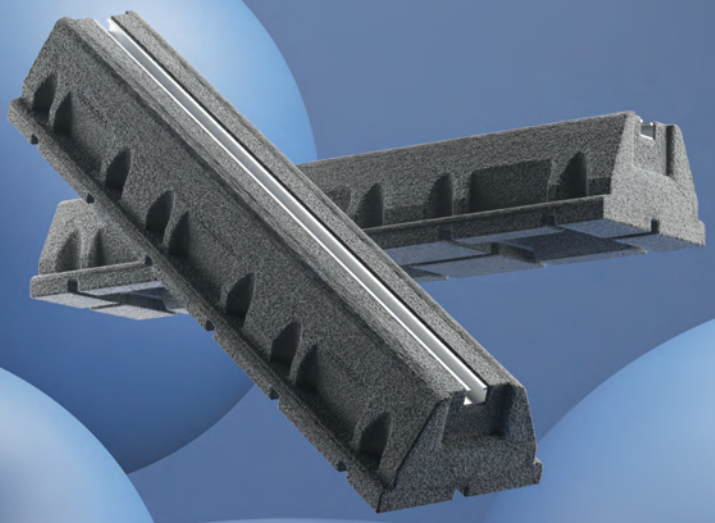

RISER



W200mm

M10 BOLT AND NUT



20x15mm



41x21mm

BROOKLYN BASE

Foot & M10 Bolts

20x15mm	41x21mm	Strapped	Boxed	Feet Qty	Dimensions L x H x W mm	Max. load per foot
S-632.1/2	S-732.1/2	✓	×	2	250 x 95 x 150mm	100kg
S-634.1/2	S-734.1/2	✓	×	2	400 x 95 x 150mm	200kg
S-636.1/2	S-736.1/2	✓	×	2	600 x 95 x 150mm	500kg
S-630.1/2	S-730.1/2	✓	×	2	1000 x 95 x 150mm	500kg
S-642.1/2	-	✓	×	2	1200 x 95 x 150mm	500kg

Foot & M10 Bolts

20x15mm	41x21mm	Strapped	Boxed	Feet Qty	Dimensions L x H x W mm	Max. load per foot
S-632/4	S-732/4	×	✓	4	250 x 95 x 150mm	100kg
S-634/2	S-734/2	×	✓	2	400 x 95 x 150mm	200kg
S-636/2	S-736/2	×	✓	2	600 x 95 x 150mm	500kg
S-636.3	S-736.3	×	✓	3	600 x 95 x 150mm	500kg
S-630	S-730	×	×	1	1000 x 95 x 150mm	500kg

Foot Only

20x15mm	41x21mm	Strapped	Boxed	Feet Qty	Dimensions L x H x W mm	Max. load per foot
C-852	C872	×	×	1	250 x 95 x 150mm	100kg
C-854	C-874	×	×	1	400 x 95 x 150mm	200kg
C-856	C-876	×	×	1	600 x 95 x 150mm	500kg
C-860	C-870	×	×	1	1000 x 95 x 150mm	500kg

Riser made of recycled SBR rubber to be used with the Brooklyn Base.
Total height when combined: 200 mm

Part No.	Strapped	Boxed	Feet Qty	Dimensions PxHxW mm	Max. load per foot
S-742	×	×	1	L250 x H95x x W200mm	100kg
S-744	×	×	1	L400 x H95 x W200mm	200kg
S-746	×	×	1	L600 x H95 x W200mm	500kg
S-740	×	×	1	L1000 x H95 x W200mm	500kg

2EMMECLIMA

Information correct at time of going to press. Not all products are available in all regions. This document has been translated using AI and may contain inaccuracies.



CONDENSER GROUND BLOCKS

Floor bases made of rigid PVC.

Item code	Dimensions LxH	Max. Load
P-032-01	350 x 80 mm	140 kg
P-031-01	450 x 80 mm	140 kg
P-030-01	1000 x 80 mm	140 kg

ECO FLOOR BASE

Made of shockproof, UV-resistant plastic, equipped with screws and bolts for fixing to the outdoor unit and adhesive strips for a good fit to the floor.

Part No.	Dimensions	Max. Load
9898-033-01	L 420 mm	320 kg

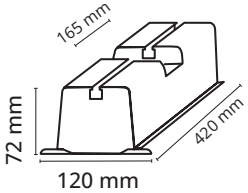



VECAMCO

Information correct at time of going to press. Not all products are available in all regions. This document has been translated using AI and may contain inaccuracies.

COEXTRUDED PVC

UV resistant, with soft PVC base. They allow for secure adaptability to the ground, absorbing vibrations from the outdoor unit. Supplied with screws and bolts for securing the machine.

H 80

Part No.	Dimensions	Max. Load
9898-032- ☐	L 350 mm	380 kg
9898-031- ☐	L 450 mm	380 kg
9898-030- ☐	L 1000 mm	380 kg

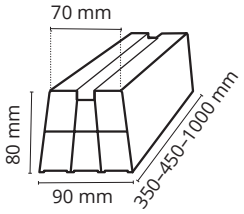

Part No.	Colour / RAL	
08	☐	9010
95	■	9011

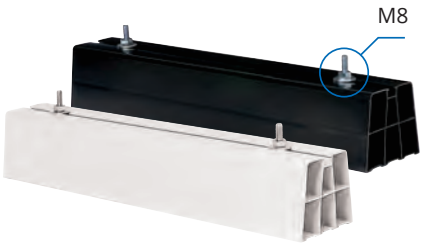

H 100

Part No.	Dimensions	Max. Load
9898-037- ☐	L 350 mm	380 kg
9898-036- ☐	L 450 mm	380 kg
9898-035- ☐	L 1000 mm	380 kg

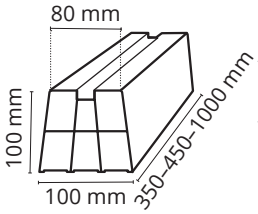

Part No.	Colour / RAL	
08	☐	9010
95	■	9011



CLOSING CAP FOR PVC BASES H 80 MM

Part No.	Dimensions
9898-029☐	90x80

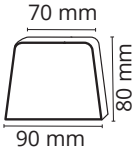



CLOSING CAP FOR PVC BASES H 100 MM

Part No.		Dimensions
9898-039☐		100x100

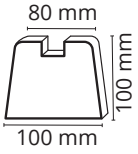

Part No.	Colour / RAL	
08	☐	9010
95	■	9011



VECAMCO

Information correct at time of going to press. Not all products are available in all regions. This document has been translated using AI and may contain inaccuracies.



H Tech Set 330 & 400mm

Fabricated on site – and accepting a range of strut & box section sizes – the H Tech set is the most flexible choice on the market.

BIG FOOT® SYSTEMS

KEY FEATURES ↓

- ✓ 50% Higher Coefficient of Friction; better surface to surface grip than rubber feet
- ✓ Maximum stability; EPDM mat conforms better to uneven surfaces than rubber
- ✓ Optimum weight distribution over whole foot print
- ✓ Fits 41 × 41mm strut, 40 × 38mm, 21 × 41mm (H Tech 330mm only)
- ✓ Strut fittings & bolts included
- ✓ 100% recycled glass filled nylon foot construction
- ✓ Optional angled mat accessory for use on uneven ground

Description	Product Code	Foot Size (mm)	Weight (Kg)	Max. Load (Kg)
330mm Set (paired Foot)	B6088/B	330	2.63	300
H Tech 330mm (single Foot)	B6997/B	330	1.1	150
Angled Base 330mm 2.5˚ (single Foot)	B6098	330	0.6	150
400mm Set (paired Foot)	B6089	400	4.57	500
Angled Base 400mm 2.5˚ (single Foot)	BN7105	400	1.2	250





* Please note: Strut is not included in kit, and is shown as an example



KIT INCLUDES ↓

Foot with adhered mat	× 2
Bracket & fixings	× 1

Information correct at time of going to press. Not all products are available in all regions. This document has been translated using AI and may contain inaccuracies.



Multi Foot

Multi Foot is a multi-purpose support for cable tray or pipe. Used with channel, strut or threaded rod, this simple nylon foot is both versatile and economical.

BIG FOOT® SYSTEMS

KEY FEATURES ↓

- ✓ Quick and easy install.
- ✓ Available in 2 sizes.
- ✓ Rigid nylon foot.
- ✓ Versatile application using channel, strut or threaded rod.
- ✓ Accepts a full range of strut sizes.
- ✓ Adhered rubber mats provide additional roof protection.
- ✓ Boxed for convenience.



Description	Product Code	Length (mm)	Width (mm)	Height (mm)	Weight (Kg)	Max. Load (Kg)
400 mm – 4 Pack	B9640	400	180	80	6	259
600 mm – 3 Pack	B9655	600	220	80	11.7	474

ALL IN ONE BOX!





* Please note: Strut, channel & rod is not included, and is shown as an example

Information correct at time of going to press. Not all products are available in all regions. This document has been translated using AI and may contain inaccuracies.



Heat Pump Drip Tray

BIG FOOT® SYSTEMS

KEY FEATURES ↓

- ✓ Drip Tray, Feet and bracket pack all in one box kit
- ✓ Anti vibration Big Foot Fix-It feet 600 included
- ✓ Min 290 / max 340mm ground clearance for better airflow around heat pump
- ✓ High Bloc feet available as optional accessories to increase ground clearance
- ✓ Metal work in RAL9002 (white) RAL9005 (black)
- ✓ Made from 20/10 Galvanised Steel
- ✓ Polyester powder coated finish (approx. 100µm thickness)
- ✓ M8 8.8 zinc passivated carbon steel high strength fixings included

Description	Product Code	Width (mm)	Height (mm)	Depth (mm)	Working Load (Kg)	Max. Load (Kg)
Heat Pump Drip Tray Kit (white)	B2075	940	Min. 290 / Max. 340	420 (Drip Tray) 600 (Feet)	300	300
Heat Pump Drip Tray Kit (black)	B2076					
Replacement metal tray with hook for brackets (white)	S-096-71		–	420	–	–

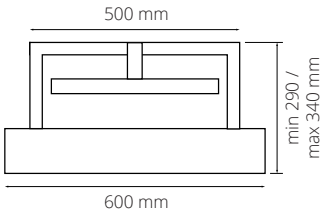

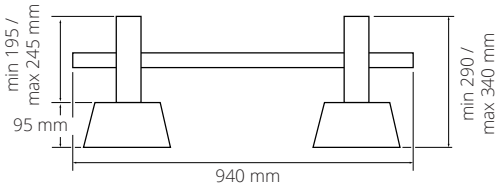



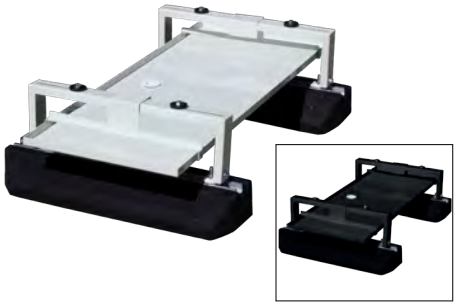

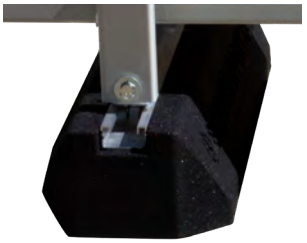

High-Bloc są dostępne jako akcesoria zapewniające większy prześwit.

- Szybka i łatwa instalacja



Information correct at time of going to press. Not all products are available in all regions. This document has been translated using AI and may contain inaccuracies.



Micro & Maxi Frames

The ideal choice for floor support of all types of condensing units, mini-splits, VRV/VRF and heat pumps.

BIG FOOT® SYSTEMS

ADVANTAGES ↓

- ✓ Suitable for all units.
- ✓ Adjustable length.
- ✓ Adjustable height.
- ✓ Maximum load up to 450 kg.

PROPERTIES ↓

- ✓ Galvanised frame.
- ✓ Powder coating in Black.
- ✓ Resistant to temperatures from -40˚C to +80˚C
- ✓ Quality assurance in accordance with ISO standards 9001 et ISO 14001.

OPTIONAL ↓

(Sold separately)

- ✓ Vibration dampers for loads up to 450 kg.
- ✓ Supports for Micro & Maxi bins.

Description	Reference
Micro Frame	**BN8410**
Maxi Frame	**BN8411**
Maxi Tray Support	**BN8412**
Micro Tray Support	**BN8413**

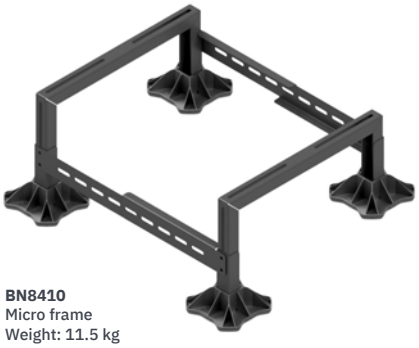

BN8410
Micro frame
Weight: 11.5 kg

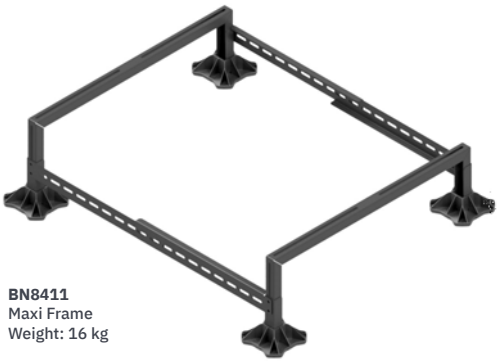

BN8411
Maxi Frame
Weight: 16 kg

OPTIONNELS ↓

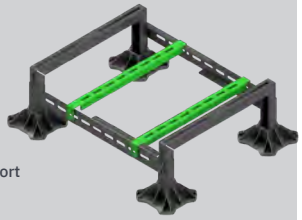

BN8412
Maxi Tray Support
Weight: 5.2 kg



9898-040
Support Anti Vibration
Weight: 0.4 kg



S-093-95
Maxi metal tray
1100 x 420 mm

S-097-95
Micro metal tray
850 x 390 mm

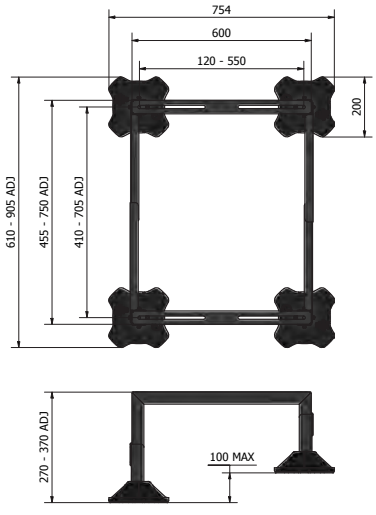

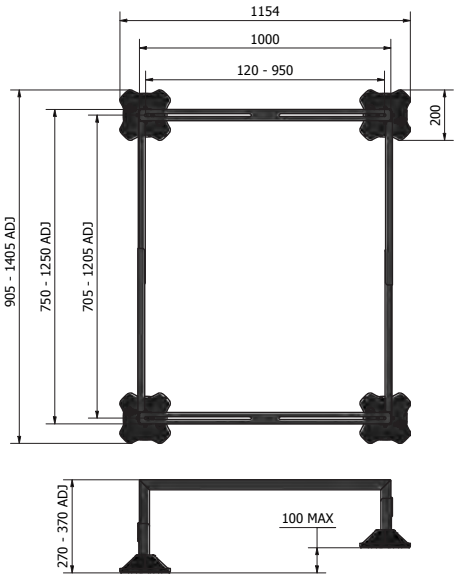

Information correct at time of going to press. Not all products are available in all regions. This document has been translated using AI and may contain inaccuracies.



Mini Frame & Extension Kit

For supporting small condensing units and heat pumps. Ideal for ground mounting or wind protected environments.

BIG FOOT® SYSTEMS

KEY FEATURES ↓

- ✓ Suitable for most mini splits & heat pumps
- ✓ Easy adjustment to suit any requirement
- ✓ Complete boxed kit of required components
- ✓ Install multiple units with extension kit

KIT INCLUDES ↓

Components	Frame	Ext.
200mm foot & mat	× 4	× 2
900mm End bar	× 2	× 1
700mm Cross bar	× 2	–
570mm Cross bar	–	× 2
Unit fixing kit	× 1	× 1

Description	Product Code	Box Length		Box Width		Box Height		Box Weight		Max. Load	
		(mm)	(in)	(mm)	(in)	(mm)	(in)	(Kg)	(lbs)	(Kg)	(lbs)
Mini Frame	BN8100	970	38 1/5	220	8 2/3	110	4 1/3	13	29	200	441
Mini Extension Kit	BN8101	970	38 1/5	220	8 2/3	110	4 1/3	8	18	200	441

Mini Frame BN8100 & **Extension Kit** BN8101

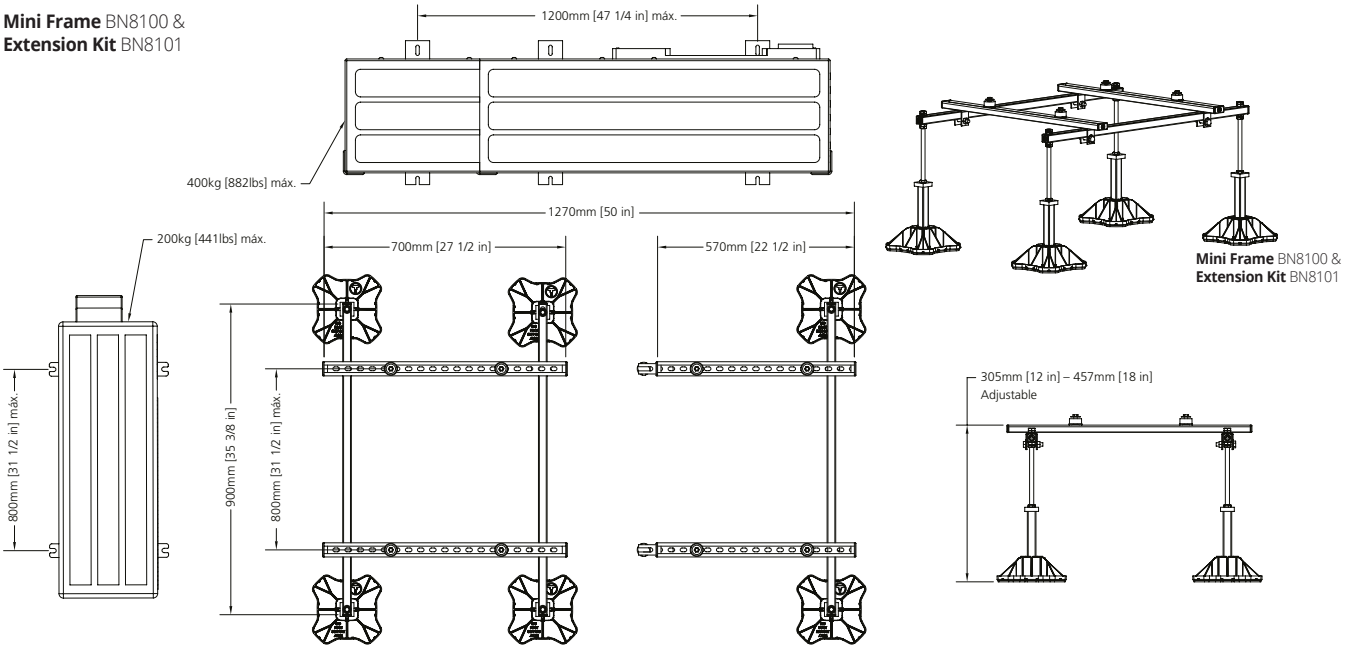

Mini Frame BN8100 & **Extension Kit** BN8101

Information correct at time of going to press. Not all products are available in all regions. This document has been translated using AI and may contain inaccuracies.



Multi Frame Wide & Extension Kit

Multi Frame Wide is 1.2m long and 1.5m wide, providing superb frame stability and prevents overturning in higher wind applications.

BIG FOOT® SYSTEMS

KEY FEATURES ↓

- ✓ Suitable for larger units up to 1.5m width/depth
- ✓ Easy adjustment to suit any requirement
- ✓ Complete boxed kit of required components
- ✓ Install units back to back

KIT INCLUDES ↓

Multi Frame	Frame	Ext.
305mm foot & mat	× 4	× 2
1.2m End bar	× 2	× 2
1.5m Cross bar	× 3	× 3
Unit clamp kit (4 pack)	× 2	× 2
Connector	-	× 4

Part	Description	Product Code	Box Length		Box Width		Box Height		Box Weight		Max. Load	
			(mm)	(in)	(mm)	(in)	(mm)	(in)	(Kg)	(lbs)	(Kg)	(lbs)
1	Multi Frame Wide	BN6900	1600	62 7/8	350	13 7/8	150	6	52	115	500	1102
2	Wide Extension Kit	BN6901	1600	62 7/8	350	13 7/8	150	6	41	93	500	1102

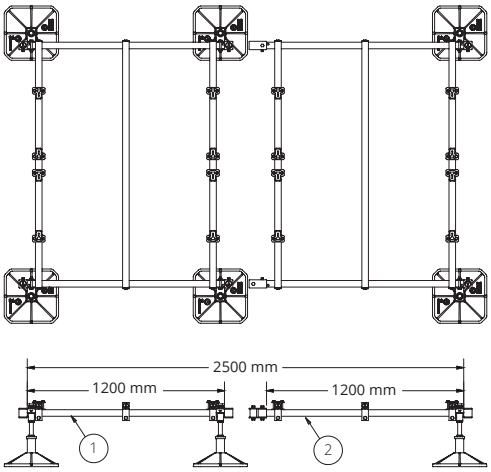

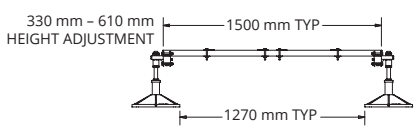



EASY TO ASSEMBLE
Cross bars simply place onto the end bars rather than sliding onto.



Information correct at time of going to press. Not all products are available in all regions. This document has been translated using AI and may contain inaccuracies.



NEW & IMPROVED

THE FRAME THAT EXTENDS IN ANY DIRECTION

Multi Frame & Multi Frame XL

Multi Frame and Multi Frame XL can be extended in any direction using the Extension kits, providing the flexibility to mix and match Multi Frame and Multi Frame XL to create the frame size and shape configuration to suit the install.

BIG FOOT® SYSTEMS

KEY FEATURES ↓

- ✓ 305mm Feet.
- ✓ 1m x 1.2m, 1.5m x 1.2m multiples.
- ✓ Mix and match any Multi Frame and Multi Frame XL of the same height.
- ✓ Extend from any side.
- ✓ Suits a wide variety of units.
- ✓ Adjustable leg assemblies.
- ✓ Easy to assemble - cross bars simply position onto the end bars.
- ✓ Supplied boxed with clamp kits.





KIT INCLUDES ↓

Multi Frame	FRAME	EXT..
305mm foot & adhered mat	× 4	× 2
1m End bar	× 2	× 2
1.2m Cross bar	× 2	× 2
Unit clamp kit (4 pack)	× 2	× 2
Connector	–	× 2
Multi Frame XL	**FRAME**	**EXT..**
305mm foot & adhered mat	× 4	× 2
1.5m End bar	× 2	× 2
1.2m Cross bar	× 3	× 3
Unit clamp kit (4 pack)	× 2	× 2
Connector	–	× 2

Description	Product Code	Length (mm)	Width (mm)	Height (mm)	Weight (Kg)	Max. Load (Kg)
Multi Frame	**BN9720**	1000	1200	335 - 440	36	500
Extension Kit	**BN9721**	1000	1200	335 - 440	26	500
Multi Frame 560 mm	**B9720/1**	1000	1200	335 -660	40	500
Extension Kit 560 mm	**B9721/1**	1000	1200	335 -660	28	500
Multi Frame XL	**BN9731**	1500	1200	335 - 440	43	500
Extension Kit XL	**BN9732**	1500	1200	335 - 440	33	500
Multi Frame XL 560 mm	**B9731/1**	1500	1200	335 -660	45	500
Extension Kit XL 560 mm	**B9732/1**	1500	1200	335 -660	35	500

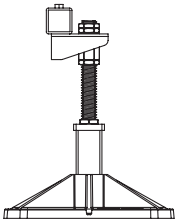

Standard Leg Assembly
Height adjustment:
335 - 440mm

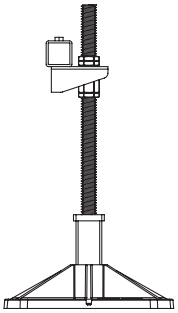

Long Stud Leg Assembly
Height adjustment:
335 - 660mm

Information correct at time of going to press. Not all products are available in all regions. This document has been translated using AI and may contain inaccuracies.



Split Bracket Premium

GRINTA
slider for split bracket

Double M8 8.8
pre-assembled screws

SPLIT BRACKETS

PREMIUM

SUPPLIED PRE-ASSEMBLED WITH DOUBLE M8 SCREWS FOR AN EASY INSTALLATION. HIGH RESISTANCE POWDER COATING.

Supplied with Slider for Split Bracket: Allows an easy and fast installation without use of a wrench.

Made in SBR rubber. Max. load: 160 kg/ kit.

Part No.	RAL	Dimensions WxHxL mm	Max. Load
S-491P-012	9002	450x400x800	160 kg
S-462P-012	9002	520x400x800	160 kg
S-463P-012	9002	560x400x800	160 kg
S-464P-012	9002	600x400x800	160 kg

P = Pre-assembled



STANDARD

SUPPLIED PRE-ASSEMBLED WITH DOUBLE M8 SCREWS FOR AN EASY INSTALLATION. HIGH RESISTANCE POWDER COATING.

Part No.	RAL	Dimensions WxHxL mm	Max. Load
S-491P	9002	450x400x800	160 kg
S-462P	9002	520x400x800	160 kg
S-463P	9002	560x400x800	160 kg
S-464P	9002	600x400x800	160 kg

P = Pre-assembled

2EMMECLIMA

Information correct at time of going to press. Not all products are available in all regions. This document has been translated using AI and may contain inaccuracies.



M8 8.8

RAL 9005

CLOCK TYPE 2

ADJUSTABLE UNIVERSAL PRE-ASSEMBLED AND NON WALL BRACKETS WITH HOOK SYSTEM.

Part No.	RAL	Dimensions WxHxL mm	Max. Load
S-211P	9002	465x400x800	160 kg
S-213P	9002	550x400x800	160 kg
S-211P.95	9005	465x400x800	160 kg
S-213P.95	9005	550x400x800	160 kg

P = Pre-assembled

CLOCK TYPE 3

ADJUSTABLE UNIVERSAL PRE-ASSEMBLED AND NON WALL BRACKETS WITH HOOK SYSTEM.




S-374-1P / S-313P


S-311P / S-310P

Part No.	RAL	Dimensions WxHxL mm	Max. Load
S-310P	9002	420x400x800	120 kg
S-311P	9002	465x400x800	160 kg
S-313P	9002	550x400x800	160 kg
S-374-1P	9002	600x400x1000	160 kg

P = Pre-assembled

2EMMECLIMA

Information correct at time of going to press. Not all products are available in all regions. This document has been translated using AI and may contain inaccuracies.

TYPE 2

AISI 304 INOX | Zn | RAL 9002 COLOUR | kg CERTIFIED 100-160 KG | TÜV SÜD



PLUS - M8 8.8

450 mm

520 / 550 / 560 / 600 mm

PRE-ASSEMBLED AND NON-PRE-ASSEMBLED UNIVERSAL ADJUSTABLE BRACKETS.

Part No.	Dimensions WxHxL mm	Zn	AISI 304	Max. Load
S-281P	450x400x800	S-251Z	I-251	160 kg
S-272P*	520x400x800	S-272Z	I-272	160 kg
S-273P*	560x400x800			160 kg
S-274P*	600x400x800	S-274Z		160 kg
S-274-1P*	600x400x1000			160 kg

P = Pre-assembled

2EMMECLIMA

Information correct at time of going to press. Not all products are available in all regions. This document has been translated using AI and may contain inaccuracies.

TYPE 3

AISI 304 INOX | RAL 9002 COLOUR | CERTIFIED 160 KG



PLUS - M8 8.8

450mm

520 / 550 / 560 / 600mm

PRE-ASSEMBLED AND NON-PRE-ASSEMBLED UNIVERSAL ADJUSTABLE BRACKETS.

Part No.	Dimensions WxHxL mm	AISI 304	Max. Load
S-381P	450x400x800		160 kg
S-372P	520x400x800	I-372 (non premontata)	160 kg
S-373P	560x400x800		160 kg
S-374P	600x400x800		160 kg
S-374-1P*	600x400x1000	I-354-1 (non premontata) barra 1000 mm	160 kg

P = Pre-assembled

2EMMECLIMA

Information correct at time of going to press. Not all products are available in all regions. This document has been translated using AI and may contain inaccuracies.

TYPE 5

RAL 9002
COLOUR

CERTIFIED
120-160 KG



ADJUSTABLE UNIVERSAL BRACKETS NOT PRE-ASSEMBLED.

Part No.	Dimensions WxHxL mm	Max. Load
S-531	450x400x850	120 kg
S-532	530x400x850	120 kg
S-533	550x400x850	120 kg
S-551	480x400x850	160 kg

2EMMECLIMA

Information correct at time of going to press. Not all products are available in all regions. This document has been translated using AI and may contain inaccuracies.

SUPER LIGHT

RAL 9002
COLOUR

CERTIFIED 100 KG



ADJUSTABLE UNIVERSAL BRACKETS FOR COMPACT UNITS.
NOT PRE-ASSEMBLED.

Part No.	Dimensions WxHxL mm	Max. Load
S-410.01	420x400x700	100 kg

2EMMECLIMA

Information correct at time of going to press. Not all products are available in all regions. This document has been translated using AI and may contain inaccuracies.

HEAVY DUTY

RAL 9002
COLOUR

CERTIFIED
200-250-300 KG



Vibration dampers
9898-024 included

S-672, S-673, S-674

INDUSTRIAL BRACKETS DESIGNED TO SUPPORT THE HEAVIEST MACHINERY.

Part No.	Dimensions WxH mm	Max. Load
S-672	520x400	300 kg
S-673	560x400	300 kg
S-674	650x400	200 kg

Simple without bar

Part No.	Dimensions WxHxL mm	Max. Load
S-572-1	520x400x960	300 kg
S-573-1	560x400x960	300 kg
S-575-1	700x400x960	250 kg

Universal

2EMMECLIMA

Information correct at time of going to press. Not all products are available in all regions. This document has been translated using AI and may contain inaccuracies.

HEAVY DUTY SPECIAL

RAL 9002
COLOUR

CERTIFIED 300-550 KG



SUPER LOAD KIT*

INDUSTRIAL BRACKETS SUPPLIED WITH ADJUSTABLE EXTENSION PIECES AND/OR SUPER LOAD KITS.

Part No.	Dimensions WxHxL mm	Max. Load
S-680-1 SUPER LONG	min 600x400x960 / max 640x400x960	300 kg
S-685-1 SUPER LOAD	min 600x400x960 / max 640x400x960	550 kg
S-683-1 SUPER LONG	min 600x400x960 / max 640x400x960 mm with 3 verticals	300 kg

SUPER LOAD KIT available separately

Part No.	Dimensions
S-800*	P100xH280xL130 mm

2EMMECLIMA

Information correct at time of going to press. Not all products are available in all regions. This document has been translated using AI and may contain inaccuracies.

POLYAMIDE BRACKET RANGE

The choice of material comes from its particular characteristics: with sudden changes in temperature and humidity, polyamide regenerates instead of deteriorating, thus increasing its efficiency and keeping the load capacity of the bracket unchanged.

- Resistance, lightness and easyness in use;
- High mechanical performances;
- Excellent resistance to aging, corrosion, rust and atmospheric agents like UV-rays and saltiness;
- Can be used in areas with temperatures ranging from -20°C to +50°C.

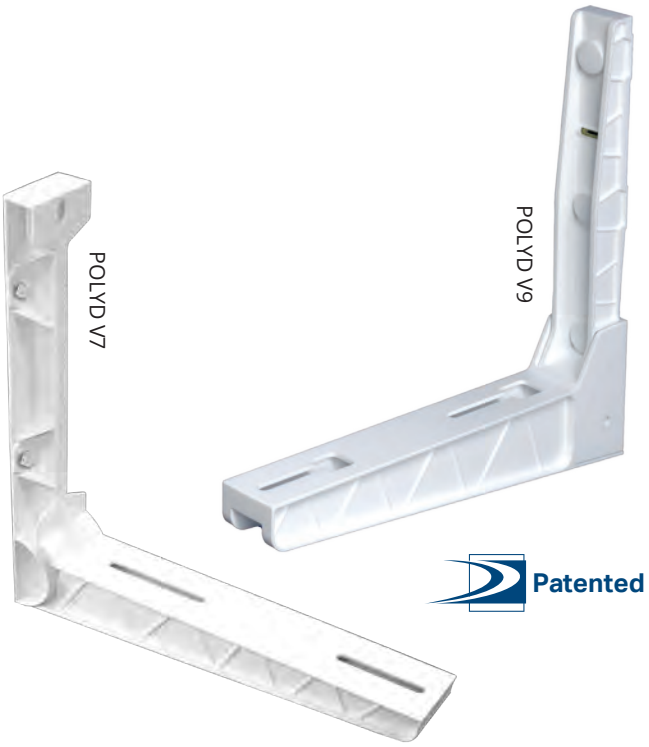

POLYD V7

Fixed polyamide bracket

Part No.	AxB	Certified Load Capacity		Max. Load
9794-511-08	450 x 450	110 Kg		330 Kg
9794-512-08	520 x 450	90 Kg		270 Kg

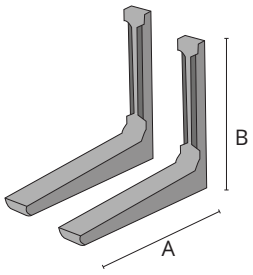

POLYD V9

Foldable and pre-assembled polyamide bracket

Part No.	AxB	Certified Load Capacity		Max. Load
9794-515-08	450 x 450	110 Kg		330 Kg
9794-516-08	520 x 450	90 Kg		270 Kg

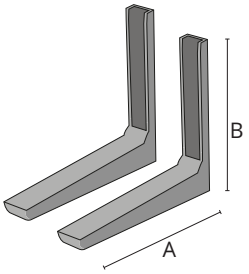



Information correct at time of going to press. Not all products are available in all regions. This document has been translated using AI and may contain inaccuracies.



ROOF BRACKET

ADJUSTABLE BRACKET FOR ROOF INSTALLATION

Adjustable inclination from 15° up to 30° according to the roof slope.

Part No.	Dimensions LxH mm
S-661	850x520 mm

2EMMECLIMA

Information correct at time of going to press. Not all products are available in all regions. This document has been translated using AI and may contain inaccuracies.

VIBRATION DAMPERS

TACCO COLOURSRANGE



The vibration damper is produced with different hardnesses (shore) identified by the color, in order to cover the widest range of applications. It resists atmospheric aging, UV rays and temperatures from -50°C to + 120°C. Distributed in kit of 4 pieces with screws for installation on bracket and/or on the ground.

Colour	For Condensers Up To	Part No.		Shore
		Blister	Box	
GREEN	100 KG	9898-037	9898-037B	35
YELLOW	200 KG	9898-038	9898-038B	45
RED	350 kg	9898-039	9898-039B	60
BLACK	450 KG	9898-040	9898-040B	70

DISPLAY STAND

The display can be assembled with different combinations of products. Available in metal for blister packs and cardboard for boxes.





DISPLAY STAND

Part No.

EXPO20

VECAMCO

Information correct at time of going to press. Not all products are available in all regions. This document has been translated using AI and may contain inaccuracies.

VIBRATION DAMPERS

SUSTA COLOURSRANGE





The vibration damper is made with different sections of the spring, corresponding to different hardnesses, in order to cover the widest range of applications. It is resistant to weathering, UV rays, and temperatures from -50°C to +120°C. Distributed in kit of 4 pieces in 2 colours to distinguish the different load capacity with screws for installation on bracket and/or on the ground.

		Part No.	
Colour	For Condensers Up To	Blister	Box
BLUE & GREEN	55 KG	9898-134	9898-134B
BLUE & YELLOW	80 KG	9898-135	9898-135B
YELLOW & RED	120 KG	9898-136	9898-136B

Part No.

EXPO20

SUSTA+ COLOURSRANGE





The anti-vibration mount is made with different sections of spring, corresponding to different hardnesses, in order to cover the widest range of applications. Even more resistant thanks to the reinforced thermoplastic cover. Resistant to atmospheric ageing, UV rays and temperatures from -50°C to +120°C. Distributed in kits of 4 pieces in 2 colours to differentiate the different load capacities, with screws for mounting on brackets and/or on the ground.

		Part No.	
Colour	For Condensers Up To	Blister	Box
BLUE & GREEN	55 KG	9898-034	9898-034B
BLUE & YELLOW	80 KG	9898-035	9898-035B
YELLOW & RED	120 KG	9898-036	9898-036B

Part No.

EXPO20

VECAMCO

Information correct at time of going to press. Not all products are available in all regions. This document has been translated using AI and may contain inaccuracies.



ANTI-VIBRATION DAMPERS

Made of vulcanised natural rubber with threaded metal inserts, they isolate and, in many cases, completely eliminate vibrations produced by machines. Supplied in packs of 4 vibration dampers, complete with nuts and washers.

	Part No.	Dimensions		
 9899-023 9899-023 9899-024 9899-024	9898-023	35x25	50 Kg	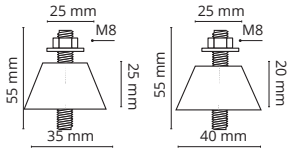
	9898-024	40x20	50 Kg	
	9898-019	40x25	80 Kg	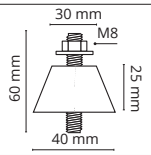
	9898-028	30x20	50 Kg	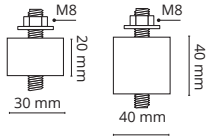
	9898-027	40x40	100 Kg	
	9898-025	48x20	80 Kg	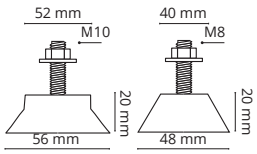
	9898-022	56x20	150 Kg	
	9898-018	56x20	250 Kg	
	9898-026	40x40	80 Kg	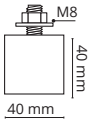

VECAMCO

Information correct at time of going to press. Not all products are available in all regions. This document has been translated using AI and may contain inaccuracies.

AV Pads

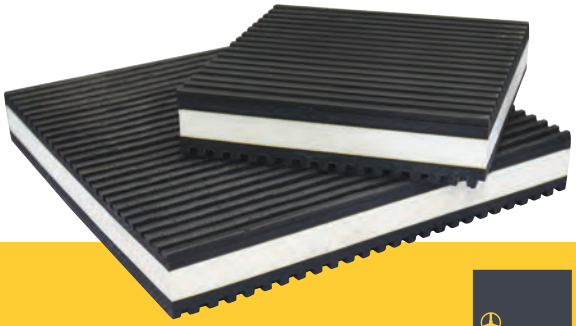

AV Pads come in a range of sizes and offer isolation against vibration between the unit and the Big Foot Frame.

KEY FEATURES ↓

- ✓ Anti-vibration core.
- ✓ Outer layer corrugated anti-slip rubber.
- ✓ Available in 6 sizes.

BIG FOOT® SYSTEMS

Description	Product Code	Length (mm)	Width (mm)	Height (mm)
51 mm	B6909	51	51	22.2
76 mm	B6910	76	76	22.2
101 mm	B6911	101	101	22.2
152 mm	B6912	152	152	22.2
305 mm	B6913	305	305	22.2
457 mm	B6914	457	457	22.2

Vibromats

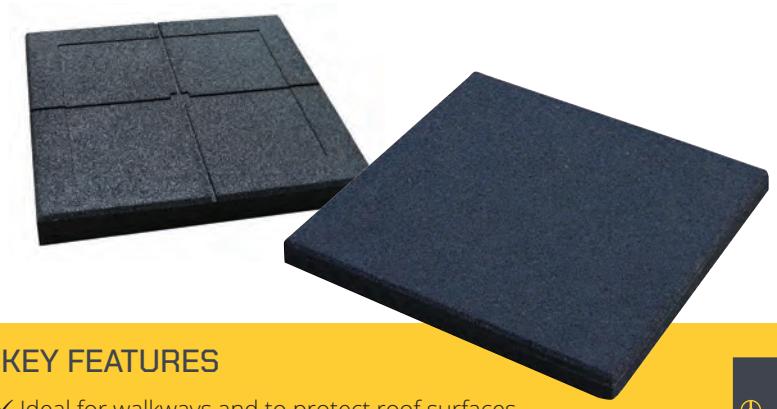

A range of durable rubber mats that can lay directly on the rooftop to protect it from potential damage from foot fall and ancillary equipment.

KEY FEATURES

- ✓ Ideal for walkways and to protect roof surfaces.
- ✓ Durable recycled rubber reduces vibration.
- ✓ 5 options available*.

BIG FOOT® SYSTEMS

Description	Product Code	Length (mm)	Width (mm)	Height (mm)
Small Strip*	B6491/1	600	150	30
Large Strip*	B6282/1	1000	500	30
Plain Tile 400	B9641	400	400	45
Plain Tile 500	B6416	500	500	45
400 with screws	167BB00662V	400	400	45
Plain Strip	B6024	1000	75	15

*NOTE: Small Strip and Large Strip include 2 no. steel plate core at either end.

Information correct at time of going to press. Not all products are available in all regions. This document has been translated using AI and may contain inaccuracies.

Drip Trays

METAL

Condensate collection tray complete with hooks, equipped with a hole and Ø 20 mm drain for condensate drainage. Adaptable to any type of metal bracket and floor support.

Part No.	Dimensions WxD mm
S-097-71	850 x 390
S-095-71	940 x 390
S-096-71	940 x 420
S-093-71	1100 x 420
S-092-71	1400 x 420

2EMMECLIMA

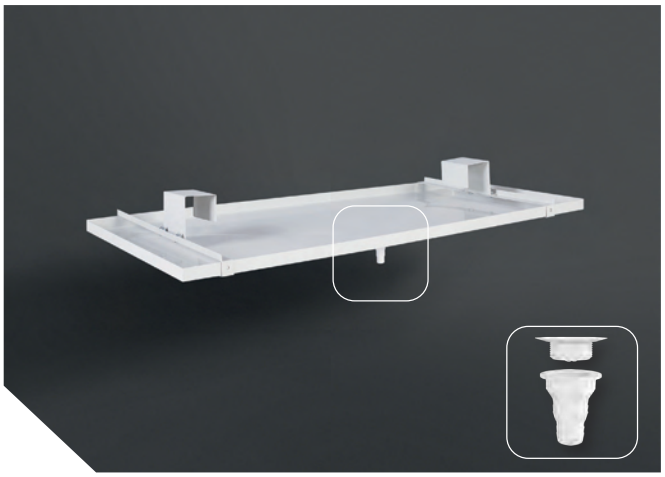

Drain Ø 20/25 mm
Code: 18580.01 available for sale

PLASTIC

Simple Plastic Condensate Collection Tray for Outdoor Units

Adaptable to all types of brackets on the market

Part No.	Dimensions WxDxH mm
9899-098-01	790 x 390 x 30
9899-099-01	945 x 425 x 40

VECAMCO

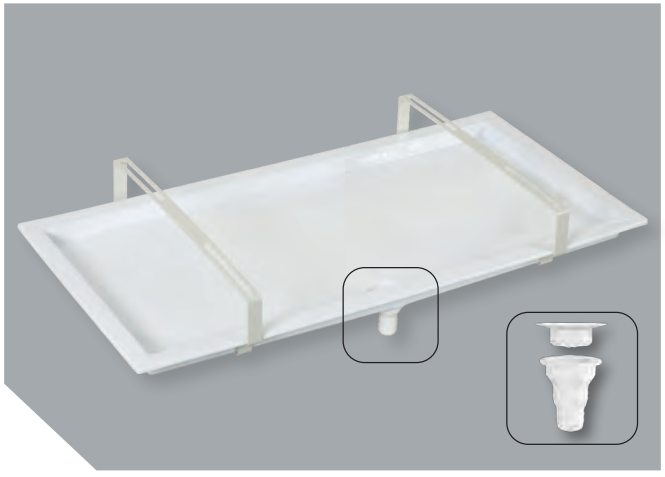

Drain Ø 20/25 mm
Code: 18580.01 available for sale

Information correct at time of going to press. Not all products are available in all regions. This document has been translated using AI and may contain inaccuracies.

CONDENSATE WASTE

WITH Ø 19/29/32 MM CONNECTION

Adaptable to the main external units on the market, with elastic press-fit closure. Supplied with 2 caps.

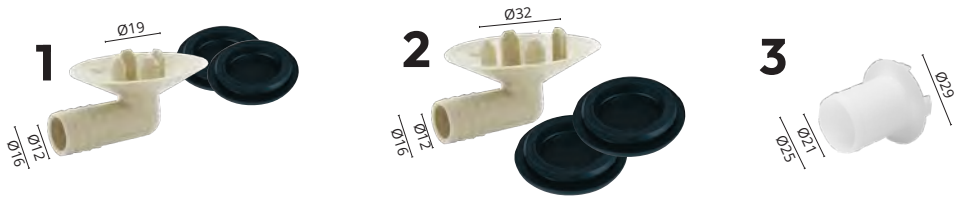

	Part No.	Size
1	9899-109	Ø 19
2	9899-108	Ø 32
3	9899-110	Ø 29

CONDENSATE WASTE



	Part No.	OD	ID	Qty
1	18580.01	Ø25 / Ø20	Ø 16	10
2	18581.01	Ø25 / Ø20	Ø 16	10

VECAMCO

Information correct at time of going to press. Not all products are available in all regions. This document has been translated using AI and may contain inaccuracies.



Vinyl Tubes	144
Rigid Pipe	145
Flexible Tubes	146-147
Pre-Installation Boxes	148
Traps	149
Drainage Fittings & Spares	150
Pipelounge	151
Connectors & Pipe Support	152-160
Tape	161
Drain Cleaner & Unblocker	162

08 CONDENSATE MANAGEMENT & DRAINAGE

ASPEN PUMPS GROUP



Vinyl Tubing

Flexible, durable and non toxic – we have the most extensive range on the market.

REINFORCED BRAIDED VINYL TUBE								
Description	Part No.	Diameter (mm)		Colour	Length (m)	Pressure (bar) @20°C	Burst Pressure (bar) @20°C	Temp. Range
		ID	OD					
1/4" (6mm)	AX5100	6	12	Clear	30	12	36	-5 °C – 65 °C
3/8" (10mm)	AX5101	10	14			9	27	
1/2" (12mm)	AX5102	16	22			7	21	
5/8" (15mm)	AX5103	15	20			6	18	
6/12 mm	AX5120	6	12	Clear	25	15	45	
10/16 mm	AX5121	10	16			10	30	
16/22 mm	AX5122	16	22			8	25	
19/26 mm	AX5123	19	26			6	18	
25/33 mm	AX5124	25	33			5	15	
1/4" (6mm)	AX5110	6	12	Black	30	12	36	
3/8" (10mm)	AX5111	10	14			9	27	
1/2" (12mm)	AX5112	16	22			7	21	
5/8" (15mm)	AX5113	15	20			6	18	

VINYL TUBE								
Description	Part No.	Diameter (mm)		Colour	Length (m)	Pressure (bar) @20°C	Burst Pressure (bar) @20°C	Temp. Range
		ID	OD					
1/4" (6mm)	AX5200	6	12	Clear	30	5	15	-5 °C – 65 °C
3/8" (10mm)	AX5201	10	14		30	4	12	
1/2" (12mm)	AX5202	16	22		30	3	11	
1/4" (6mm)	AX5203	6	12		10	4	12	
4/7 mm	AX5210	4	7		50	7	21	
6/9mm	AX5211/1	7	7		50	4	12	
6/9 mm	AX5211/F	6	9	Blue	50	4	12	
9/12 mm	AX5212	9	12	Clear	50	8	25	
10/14 mm	AX5213	10	14			8	25	
15/19 mm	AX5214	15	19			5	15	

CLEAR HOSE				
Part No.	Diameter (mm)		Colour	Length (m)
	ID	OD		
9899-049-00	9	6	Clear	25
9899-076-00	14	10		25



VECAMCO

Information correct at time of going to press. Not all products are available in all regions. This document has been translated using AI and may contain inaccuracies.

RIGID CONDENSATE DRAIN PIPE

Patented

Made of white (RAL 9010), shockproof, fireproof PVC stabilized against UV rays. Suitable for installation along as well as under wall. Hose and joints can easily be fitted by pre-mounted gaskets on the joints.

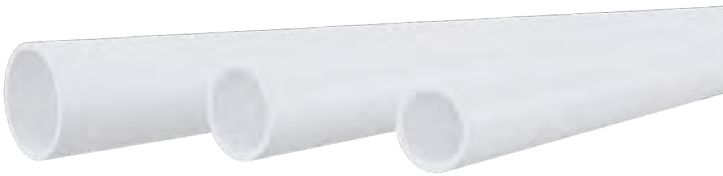

Part No.	Ø	
9899-040-08	0.9″	Ø 20 mm
9899-110-08	1″	Ø 25 mm
9899-120-08	1.2″	Ø 32 mm

PVC CONNECTORS FOR RIGID DRAIN PIPE

Sealing gasket to improve the grip on the rigid drain pipe.

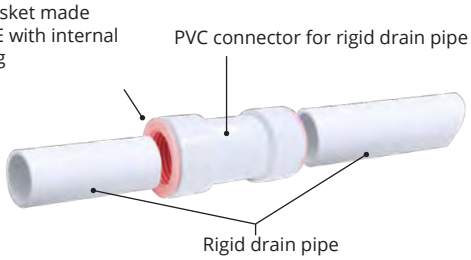



	Part No.	Ø	
FF SLEEVE	9899-041-08	0.9″	Ø 20 mm
	9899-111-08	1″	Ø 25 mm
	9899-121-08	1.2″	Ø 32 mm
90° BEND	9899-042-08	0.9″	Ø 20 mm
	9899-112-08	1″	Ø 25 mm
	9899-122-08	1.2″	Ø 32 mm
45° BEND	9899-043-08	0.9″	Ø 20 mm
	9899-113-08	1″	Ø 25 mm
	9899-123-08	1.2″	Ø 32 mm

PVC GLUE

Part No.
9899-047-08



BURR REMOVER

Part No.
9002-925





	Part No.	Ø	
T-JOINT	9899-044-08	0.9″	Ø 20 mm
	9899-114-08	1″	Ø 25 mm
	9899-124-08	1.2″	Ø 32 mm
Ø25/20 MM PIPE REDUCER	9899-117-08	1″-0.8″	Ø 25-20 mm
	9899-127-08	1.2″-1″	Ø 32-25 mm
CONNECTING SLEEVE Connecting sleeve from flexible hose to rigid drain pipe.	9899-046-08	0.8″-0.8″	Ø 20-20 mm
	9899-116-08	0.8″-1″	Ø 20-25 mm
HOSE FIXING CLIP	9899-045-08	0.9″	Ø 20 mm
	9899-115-08	1″	Ø 25 mm
	9899-125-08	1.2″	Ø 32 mm

VECAMCO

Information correct at time of going to press. Not all products are available in all regions. This document has been translated using AI and may contain inaccuracies.

COILED HOSE

Description	Part No.	Colour	Diameter (mm) ID	Diameter (mm) OD	Length (m)	Pressure (bar)	Burst Pressure (bar)	Temp. Range
Flexible coextruded hose	9899-053-01	White	16	18	50	n/a	n/a	
	9899-052-01		18	20				
Flexible Hose	9899-051-01		16	18	50	n/a	n/a	
	9899-050-01		18	20				
Flexible coextruded hose with M/F fitting	9899-054-01	Grey	6/18 and 18/20 mm		50	n/a	n/a	
Coiled hose	9899-059-01	White	–	14	30	n/a	n/a	n/a
	9899-055-01			20				
	9899-137-01			16				
	9899-056-01			18				
	9899-057-01			16				
	9899-058-01			25				
	9899-068-01			32				



CONNECTORS FOR COILED HOSES

For multi-split installations, they convey the condensate outflow of two different units to one single pipeline. Suitable for coiled hoses only.

Part No.	Ø AxB
9899-142-01	Ø 16/16 mm
9899-162-01	Ø 20/20 mm
9899-141-01	Ø 16/16 mm
9899-140-01	Ø 20/16 mm
9899-161-01	Ø 20/20 mm

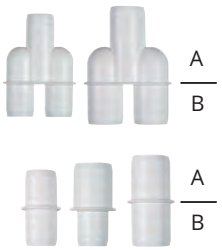

Patented

VECAMCO

Information correct at time of going to press. Not all products are available in all regions. This document has been translated using AI and may contain inaccuracies.

THREE-WAY CONNECTORS FOR FLEXIBILE HOSE

For multi-split installations, they connect the condensate outflow of two condensing units to one single pipeline. Suitable for flexible hoses only, supplied with gaskets.

	Part No.	Ø	
1	9899-062-01	Ø 0.6”/0.7”	Ø 16/18 mm
	9899-060-01	Ø 0.7”/0.8”	Ø 18/20 mm
2	9899-066-01	Ø 0.6”/0.7”	Ø 16/18 mm
	9899-064-01	Ø 0.7”/0.8”	Ø 18/20 mm
3	9899-067-01	Ø 0.6”/0.7”	Ø 16/18 mm
	9899-065-01	Ø 0.7”/0.8”	Ø 18/20 mm



Patented

Information correct at time of going to press. Not all products are available in all regions. This document has been translated using AI and may contain inaccuracies.

PRE-INSTALLATION BOXES

Produced for application in all new constructions, when the installation of an air-conditioning split is already planned.

- Ideal for under wall installations;
- Quick installation;
- Cost and time saving;
- No damages on the walls.

DRY SAFE BOX



Part No.	**Dry Safe Box L 430**
9899-270-01	430x160x65 mm
9899-271-01	430x160x50 mm
	Dry Safe Box L 525
9899-272-01	525x160x65 mm

QUICK BOX



Part No.	**Quick Box Rev. Horizontal Outlet R – L mm**
9899-015-01	430 x 108 x 50
9899-016-01	430 x 108 x 65
Quick Box Rev. Vertical Outlet R-L	
9899-018-01	430 x 108 x 50 **Mini Combi Plus mm**
9899-019-01	430 x 108 x 65

HYDRONIC BOX



MINI COMBI PLUS



COMBI PLUS



9899-282-01	**Hydronic Box Horizontal** 430 x 166 x 65 mm
9899-283-01	**Hydronic Box Vertical** 430 x 166 x 65 mm
9899-284-01	**Hydronic Box Dual Plus Outlet** 430 x 166 x 65 mm
9899-285-01	**Hydronic Box Central Plus Outlet** 430 x 157 x 65 mm

Combi Plus and Mini Combi Plus complete with pins for securing the lid and O-ring.

Part No.	**Mini Combi Plus mm**
9899-251-01	430x103x68
9899-252-01	430x103x68
9899-255-01	430x103x68

Part No.	**Combi Plus mm**
9899-201-01	525x105x68
9899-202-01	525x105x68
9899-205-01	525x105x68

VECAMCO

Information correct at time of going to press. Not all products are available in all regions. This document has been translated using AI and may contain inaccuracies.

DRYWALL BOX



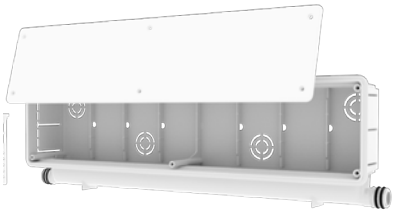

Drywall Box is a pre-installation box for plasterboard. Using six plates, the box can be fixed to a single (12 mm) or double (24 mm) plasterboard panel; the box's adaptability makes installation quick and easy. This simple but innovative solution allows the product to be fixed in place, completely concealing the fixing system behind the plasterboard, unlike other solutions on the market that require the installation of external, visible supports.

Part No.	Description
9899-035-01	Drywall Box 430 x 108 x 65 mm
KT035-01	Set di Piastre (6 pz)



Set of Platelets

DRY MECHANICAL INSPECTIONABLE TRAPS

Mechanical dry traps are designed to eliminate bad smells coming from the condensate discharge pipes which is one of the major issues in the installation of air conditioning systems. Most of the traps are located inside the walls hindering inspection and maintenance operations.

- Possibility of inspection;
- Possibility of anomaly detection;
- Transparent thermoplastic material to facilitate visual inspection.

MICRO

Description	Part No.
Inspectable mechanical 'Micro' Dry trap kit	9899-244-01



- Micro dry trap
- Right/left installation
- Complete with support bracket with spirit level
- Supplied with O-ring; Box with lid and screws; Ø 18 mm adapter fitting.

MINI

Description	Part No.
Inspectable mechanical 'Mini' Dry trap kit	**9899-242-01**



- Mini dry trap
- Right/left installation
- Universal connection
- Supplied with O-ring
- Box with lid and screws.

VECAMCO

Information correct at time of going to press. Not all products are available in all regions. This document has been translated using AI and may contain inaccuracies.

ADAPTER CONNECTIONS

Joints designed to connect rigid pipe to flexible drain hose. They are suitable for joining the outlet pipes of the evaporator to the pipe or hose of a different size. They allow easy connection to pipes Ø 14-16-18-20.

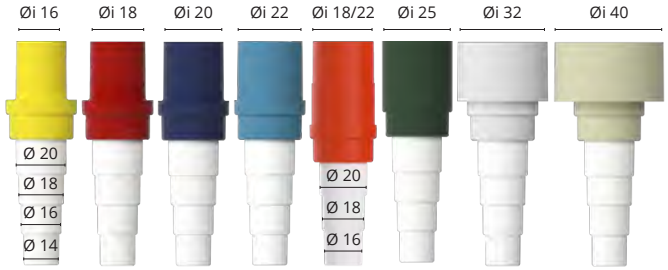

Part No.	ID		OD	
9899-143-01	Ø 0.6"	Ø 16mm	Ø 0.76"	Ø 19.4mm
9899-144-01	Ø 0.7"	Ø 18mm	Ø 0.84"	Ø 21.4mm
9899-145-01	Ø 0.8"	Ø 20mm	Ø 0.92"	Ø 23.4mm
9899-149-01	Ø 0.9"	Ø 22mm	Ø 1"	Ø 25.4mm
9899-138-01	Ø 0.7"-0.9"	Ø 18/22mm	Ø 0.84"/1"	Ø 21.4/25.4mm
9899-146-01	Ø 1"	Ø 25mm	Ø 1.12"	Ø 28.4mm
9899-147-01	Ø 1.2"	Ø 32mm	Ø 1.39"	Ø 35.4mm
9899-148-01	Ø 1.5"	Ø 40mm	Ø 1.71"	Ø 43.4mm

ADAPTER FITTINGS FOR 'MICRO' SIPHONS



Part No.	ID	OD
9899-153-01	Ø 16mm	Ø 19,4mm
9899-154-01	Ø 18mm	Ø 21,4mm
9899-155-01	Ø 20mm	Ø 23,4mm
9899-159-01	Ø 22mm	Ø 25,4mm
9899-139-01	Ø 18/22mm	Ø 21,4/25,4mm
9899-156-01	Ø 25mm	Ø 28,4mm
9899-157-01	Ø 32mm	Ø 35,4mm
9899-158-01	Ø 40mm	Ø 43,4mm

Information correct at time of going to press. Not all products are available in all regions. This document has been translated using AI and may contain inaccuracies.



Multi Pipe Support

Pipelounge pipe support systems keep pipe runs neatly organised, resulting in a professional, tidy finish on every install. Allowing expansion and contraction of multiple insulated pipes. This not only protects the pipework but also saves installers significant time and money by simplifying the installation process. **Faster. Neater. Smarter.**



PIPE LOUNGE

Channel

Rod

Surface

- UL 94 Classification – V0
- Versatile: Connect horizontally for wider spans or stack vertically in tight spaces.
- Economical & Robust: Ensures a high-quality installation for both new builds and retrofits.
- Fits M10 threaded rod.
- Pipelounge supports are rated for 50kg loads. For loads over 50kg a standard metal strut section must be used.

SPECIFICATIONS	
Material	PC ABS plastic
Max. Load	50kg (without metal support)
Sustainability	100% recyclable
Material	Fire retardant V-0 rated plastic

Scan here for full range:

Please note, these products are sold in box quantities only.

OPTIONS		
Part No.	Description	Box Qty
PLmini	Pipelounge Pipe Support 113 x 250mm Box	40
PL150	Pipelounge Pipe Support 150 x 250mm Box	30
PL200	Pipelounge Pipe Support 200 x 250mm Box	20
PL300	Pipelounge Pipe Support 300 x 250mm Box	20
PL400	Pipelounge Pipe Support 400 x 250mm Box	10
PL500	Pipelounge Pipe Support 500 x 250mm Box	10
PL600	Pipelounge Pipe Support 600 x 250mm Box	10
PLjoiner	Pipelounge Joiner Clips Box	20
PLpacker	Pipelounge Packers Box	20
PLsticker	Pipelounge Refrigeration Stickers Box	100

Information correct at time of going to press. Not all products are available in all regions. This document has been translated using AI and may contain inaccuracies.

Tube & Connector Fittings



Adaptors / Straight Connectors

SIZING OPTIONS			
Size	Ideal Use	Part No.	Pack Qty
6 mm – 10 mm	Reduction of 6 mm (1/4") on 10 mm (3/8")	FP2020	5
6 mm, 10 mm, to 12 mm to 16 mm	1/4 " to 3/8 " to 5/8 " to 1/2 " for peristaltic pumps	FP2632	5



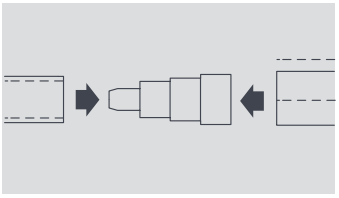

Non-return Valves

SIZING OPTIONS			
Size	Ideal Use	Part No.	Pack Qty
6 mm (1/4 ")	Prevents backflow of water	FP2628	5
10 mm (3/8 ")	Prevents backflow of water	FP2630	5



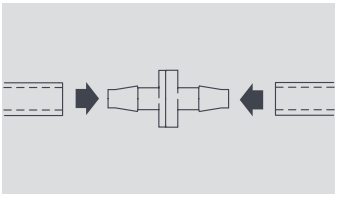

Hose to Hose

SIZING OPTIONS			
Size	Ideal Use	Part No.	Pack Qty
6 mm (1/4 ")	Equal "T" Connector	FP2024	5
6 mm (1/4 ")	Elbow Connector	FP2028	5
6 mm (1/4 ")	Straight Connector	FP2622	5
10 mm (3/8 ")	Equal "T" Connector	FP2030	5
10 mm (3/8 ")	Elbow Connector	FP2032	5
10 mm (3/8 ")	Straight Connector	FP2624	5
19/16 mm	Blue straight connector	209DV00012	50
16 mm	Blue Y Connector	209DV00017	10
16 mm	Blue Equal "T" Connector	209DV00018	10
16 mm	Blue Elbow Connector	209DV00019	10
16 mm	Blue Straight Connector	209DV00020	10



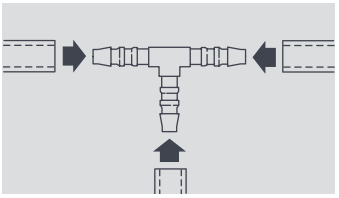

Hose to Overflow or Waste / Soil Pipe

SIZING OPTIONS			
Size	Ideal Use	Part No.	Pack Qty
6 mm (1/4 ") to 10 mm (3/8 ") – overflow pipe 21 mm	Hose to Overflow	FP2040	3
6 mm (1/4 ") to 10 mm (3/8 ") – self sealing adaptor	Hose to Waste / Soil Pipe (Drill hole to 11.5mm diameter)	FP2038	3



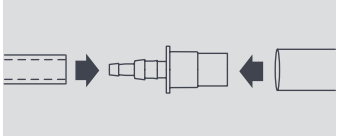

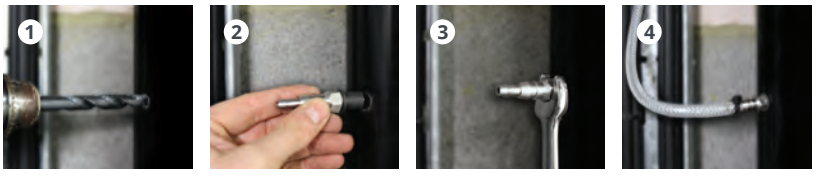



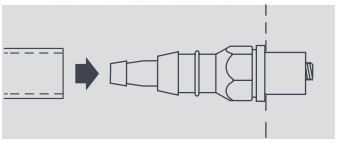

Note: All connectors should be fitted with the relevant cable ties

Information correct at time of going to press. Not all products are available in all regions. This document has been translated using AI and may contain inaccuracies.



Rubber Connectors

Mini Pump

RUBBER ADAPTOR TO CONNECT A DUCTED UNIT TO A MINI PUMP

OPTIONS				
Ducted AC outlet OD	Reservoir Pump OD	Ideal Use	Part No.	Pack Qty
20 mm	16 mm	Mitsu Heavy	FP2001	3
25 mm	16 mm	Daikin, Mitsu Elec/Heavy, Panasonic, LG	FP2002	3
32 mm	16 mm	Daikin, Mitsu Elec/Heavy, Panasonic, LG	FP2003	3



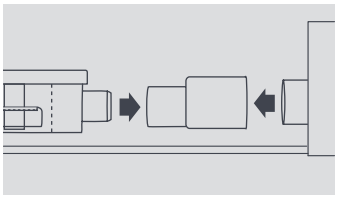

90˚ LONG ARM BEND TO CONNECT A WALL MOUNT TO MINI PUMP RESERVOIR

OPTIONS				
Drip tray outlet OD	Reservoir Pump OD	Ideal Use	Part No.	Pack Qty
12 mm	16 mm	LG wall mount and floor mount	FP2006	3
16 mm	16 mm	Wall mount and floor mount	FP2056	3



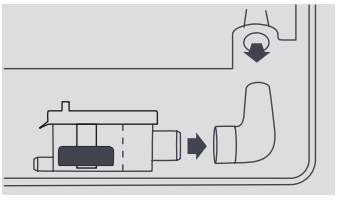

OFFSET CONNECTOR

OPTIONS				
Drip tray outlet OD	Reservoir Pump OD	Ideal Use	Part No.	Pack Qty
16 mm	16 mm	Can be used universally	FP1024	5



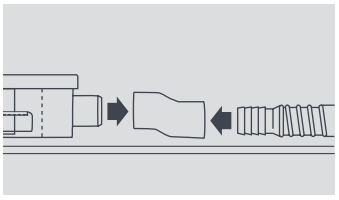

Tank Pump

RUBBER ADAPTOR TO CONNECT A CASSETTE UNIT CONDENSATE DRAIN PIPE TO A TANK PUMP

OPTIONS				
Cassette outlet OD	Overflow pipe OD	Ideal Use	Part No.	Pack Qty
16 mm	21 mm	Unités LG	FP2011	3
26 mm	21 mm	Daikin, Panasonic	FP2012	3
32 mm	21 mm	Daikin, Mitsu Elec/Heavy, Panasonic, LG	FP2013	3



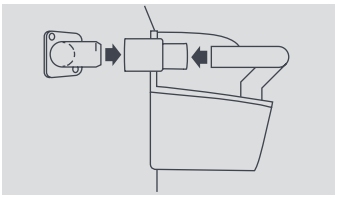

Pipe to Pipe

RUBBER ADAPTOR TO CONNECT 21MM OVERFLOW PIPE TO WASTE PIPE

OPTIONS				
Overflow pipe OD	Waste pipe OD	Ideal Use	Part No.	Pack Qty
21 mm	25 mm	Reducing or enlarging pipe diameters	FP2016	3
21 mm	32 mm	Reducing or enlarging pipe diameters	FP2017	3
21 mm	40 mm	Reducing or enlarging pipe diameters	FP2018	3



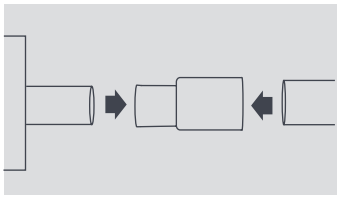

Note: All connectors should be fitted with the relevant cable ties

Information correct at time of going to press. Not all products are available in all regions. This document has been translated using AI and may contain inaccuracies.

Metal Hanger



A rod clip ideal for supporting air conditioning line set pairs.

Channel

Rod

Surface

Key Features

- Fits on both M8 and M10 studding
- Rapid 2 pipe installation
- Avoids the need for cable trays
- Zinc passivated to resist corrosion
- Ideal for when you need to meet fire regulations

SPECIFICATIONS	
Materials of construction	Zinc passivated mild steel
Max. temp	1000 °C
Max. rec. distance per clip	1,2 m

SIZING OPTIONS

Description	Liquid*	Gas*	Part No.	Pack Qty
2	10 mm (3/8 “)	16 mm (5/8 “)	B6492/10	10
3	13 mm (1/2 “)	22 mm (7/8 “)	B6493/10	10
4	16 mm (5/8 “)	28 mm (1 1/8 “)	B6494/10	10

* Approximate pipe sizes (allowing for insulation)

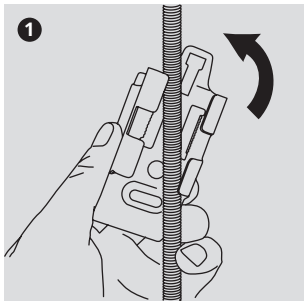

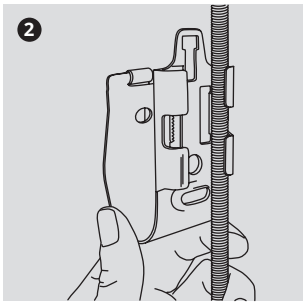

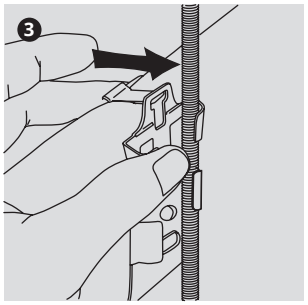

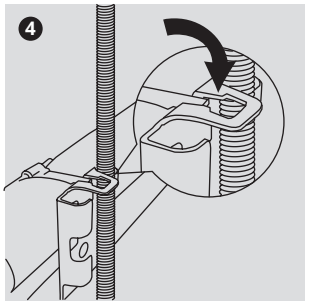

Information correct at time of going to press. Not all products are available in all regions. This document has been translated using AI and may contain inaccuracies.

Stud Clip



Unique ratchet design ensures quick installation and adjustment.

Channel

Rod

Surface

Key Features

- Available for M8 and M10 studding
- Fast fixing direct to studding
- Simple to install, adjust and relocate
- Fits metric and imperial pipe sizes

SPECIFICATIONS	
Materials of construction	Nylon
Max. temp	70 °C
Max. rec. distance per clip	1,2 m

SIZING OPTIONS					M8	
Size	Lagging 6 mm	9 mm	13 mm	19 mm	Part No.	Pack Qty
6 mm (1/4 ")					B6800/10	10
10 mm (3/8 ")					B6802/10	10
13 mm (1/2 ")					B6801/10	10
16 mm (5/8 ")					B6803/10	10
19 mm (3/4 ")	6 mm (1/4 ")				B6804/10	10
22 mm (7/8 ")	10 mm (3/8 ")				B6805/10	10
25 mm (1 ")	13 mm (1/2 ")	6 mm (1/4 ")			B6806/10	10
28 mm (1 1/8 ")	16 mm (5/8 ")	10 mm (3/8 ")			B6807/10	10
32 mm (1 1/4 ")	19 mm (3/4 ") 22 mm (7/8 ")	13 mm (1/2 ") 16 mm (5/8 ")			B6808/10	10
35 mm (1 3/8 ")		19 mm (3/4 ")	10 mm (3/8 ") 13 mm (1/2 ")		B6809/10	10
38 mm (1 1/2 ")	28 mm (1 1/8 ")	22 mm (7/8 ")	16 mm (5/8 ")		B6810/10	10
41 mm (1 5/8 ")	35 mm (1 3/8 ")	28 mm (1 1/8 ")	19 mm (3/4 ") 22 mm (7/8 ")	6 mm (1/4 ") 10 mm (3/8 ")	B6811/10	10
50 mm (2 ")				13 mm (1/2 ")	B6812/10	10
55 mm (2 1/8 ")	41 mm (1 5/8 ")	35 mm (1 3/8 ") 41 mm (1 5/8 ")	28 mm (1 1/8 ") 35 mm (1 3/8 ")	16 mm (5/8 ") 19 mm (3/4 ") 22 mm (7/8 ")	B6813/10	10

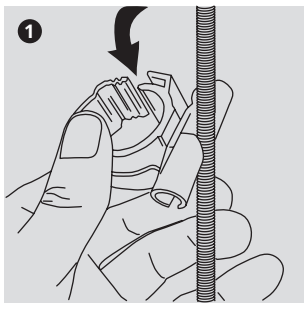

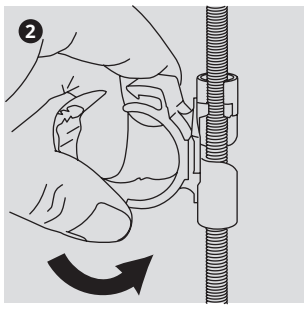

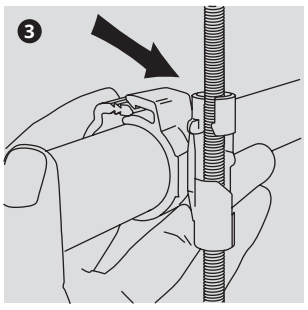

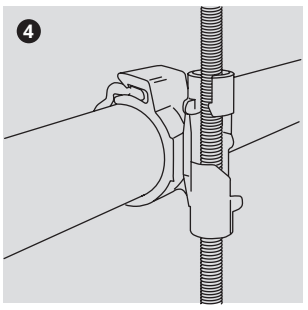

Information correct at time of going to press. Not all products are available in all regions. This document has been translated using AI and may contain inaccuracies.

Stud Clip M8 3 1/8” & 2 Pipe



A new range of stud clips that are ideal for refrigeration and air conditioning systems.

Channel

Rod

Surface

Key Features
(Stud Clip (2 pipe) 3 1/8 “)

- The Stud Clip M8 31/8” is ideal for refrigeration pipework with a versatile ratchet from 54mm to 80mm pipe sizes
- Fast fixing direct to studding
- Fits metric and imperial pipe sizes

Key Features
(Stud Clip 2 Pipe)

- Offers horizontal support for pipe sets on air conditioning systems
- Available for M8 and M10 studding
- Simple to install, adjust and relocate
- Secure extendable ratchet closure
- Clip encloses both line set and cables

SPECIFICATIONS	
Materials of construction	Nylon
Max. temp	70 °C
Max. rec. distance per clip	1,2 m

SIZING OPTIONS		
Size	Part No.	Pack Qty
Stud Clip 80 mm (3 1/8”)	B7200/5	5
2 pipes 13 mm (1/2 “) – 22 mm (7/8 “) to 16 mm (5/8 “) – 28 mm (1 1/8 “)	B7205/5	5

Approximate pipe sizes (allowing for 13mm insulation)

STUD CLIP (2 PIPE) 3 1/8“ INSTALLATION

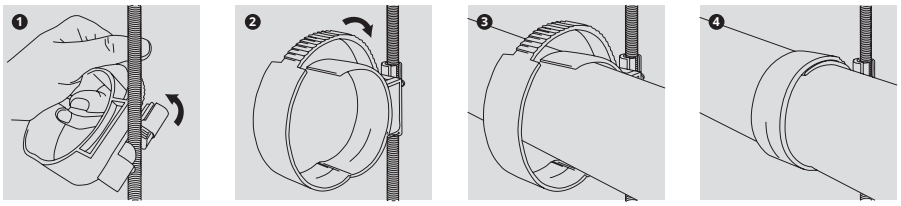

2 PIPE INSTALLATION

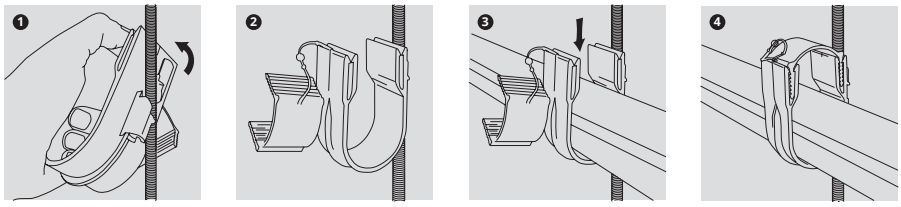

Information correct at time of going to press. Not all products are available in all regions. This document has been translated using AI and may contain inaccuracies.

Plastic Hanger



This dual stud size clamping system will fit securely to both M8 and M10 studding.

Channel

Rod

Surface

Key Features

- Easy installation
- Fits on both M8 and M10 studding
- Avoids the need for cable tray
- Adjustable clipping mechanism

SPECIFICATIONS	
Materials of construction	Nylon
Max. temp	70 °C
Max. rec. distance per clip	1,2 m

SIZING OPTIONS					
Description	Liquid*	Gas*	Rod Fitting Size	Part No.	Pack Qty
P2	10 mm (3/8 ")	16 mm (5/8 ")	8 ou 10 mm	B6543/5	5
P3	13 mm (1/2 ")	22 mm (7/8 ")	8 ou 10 mm	B6544/5	5
P4	16 mm (5/8 ")	28 mm (1 1/8 ")	8 ou 10 mm	B6545/5	5
P2	10 mm (3/8 ")	16 mm (5/8 ")	6 ou 8 mm	B6715/5	5
P3	13 mm (1/2 ")	22 mm (7/8 ")	6 ou 8 mm	B6716/5	5
P4	16 mm (5/8 ")	28 mm (1 1/8 ")	6 ou 8 mm	B6717/5	5

* Approximate pipe sizes (allowing for insulation)

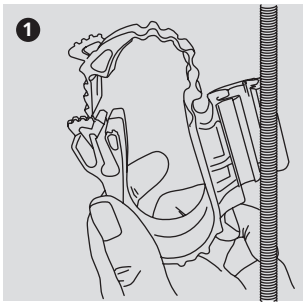

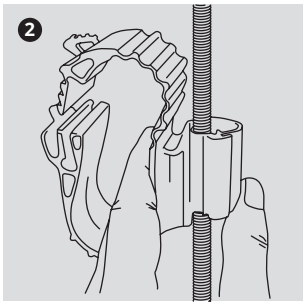

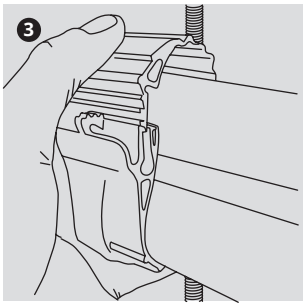

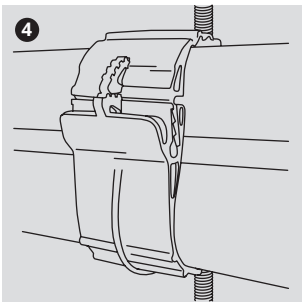

Information correct at time of going to press. Not all products are available in all regions. This document has been translated using AI and may contain inaccuracies.

Grab Clip



The Xtra Grab Clip rod clip is ideal for air conditioning line set pairs.

Channel

Rod

Surface

Key Features

- Grab Clip locates quickly to M8 and M10 studding
- Robust metal construction
- Snap shut lid secures pipe set
- Quick and easy pipe installation
- Wide metal construction for greater pipe support
- Can also be used for surface mount
- Ideal for when you need to meet fire regulations

SPECIFICATIONS	
Materials of construction	Powder coated mild steel
Max. temp	1000 °C
Max. rec. distance per clip	1,2 m

SIZING OPTIONS				
Description	Liquid*	Gas*	Part No.	Pack Qty
2	10 mm (3/8 “)	16 mm (5/8 “)	B2080/10	10
3	13 mm (1/2 “)	22 mm (7/8 “)	B2081/10	10
4	16 mm (5/8 “)	28 mm (1 1/8 “)	B2082/10	10

* Approximate pipe sizes (allowing for insulation)

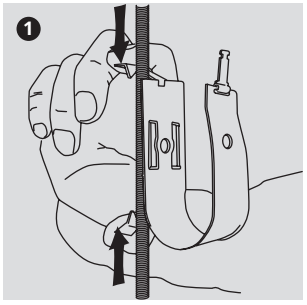

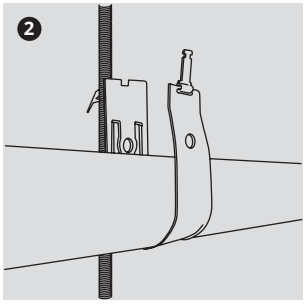

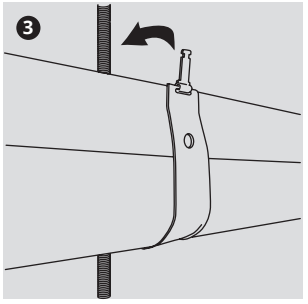

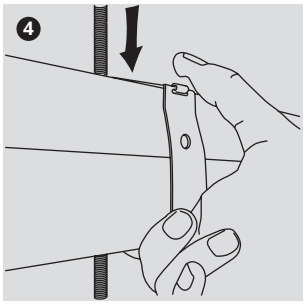

Information correct at time of going to press. Not all products are available in all regions. This document has been translated using AI and may contain inaccuracies.

3 Pipe Clip



The uniquely designed Xtra 3 Pipe Clip provides support for VRV / VRF systems pipework.

Channel

Rod

Surface

Key Features

- Available for a wide range of pipe group sizes
- Locates to M8 and M10 studding
- Wide metal arms for greater pipe support
- No need for cable tray
- Hinge security cover plate fastens with one screw
- Can also be used for surface mount

SPECIFICATIONS	
Materials of construction	Powder coated mild steel
Max. temp	1000 °C
Max. rec. distance per clip	1,2 m

SIZING OPTIONS				
Description	Pipe groups from	Pipe groups to	Part No.	Pack Qty
1	10 mm (3/8 ") 16 mm (5/8 ") 19 mm (3/4 ")	13 mm (1/2 ") 19 mm (3/4 ") 25 mm (1 ")	B6361/5	5
2	13 mm (1/2 ") 28 mm (1 1/8 ") 19 mm (3/4 ")	16 mm (5/8 ") 25 mm (1 ") 28 mm (1 1/8 ")	B6362/5	5
3	16 mm (5/8 ") 28 mm (1 1/8 ") 28 mm (1 1/8 ")	19 mm (3/4 ") 35 mm (1 3/8 ") 28 mm (1 1/8 ")	B6363/5	5
4	22 mm (7/8 ") 35 mm (1 3/8 ") 28 mm (1 1/8 ")	19 mm (3/4 ") 41 mm (1 5/8 ") 35 mm (1 3/8 ")	B6364/5	5

Approximate pipe sizes (allowing for 13mm insulation)

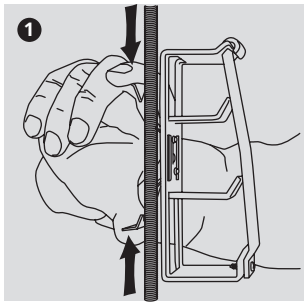

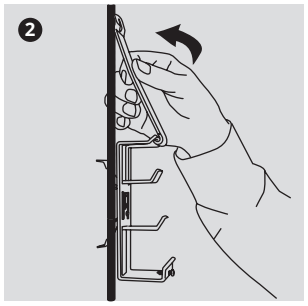

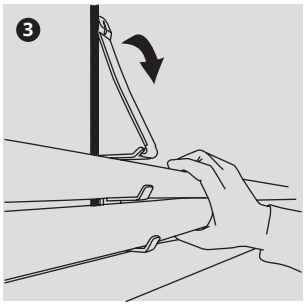

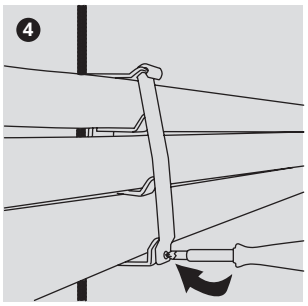

Information correct at time of going to press. Not all products are available in all regions. This document has been translated using AI and may contain inaccuracies.

Grip Lock



Best selling versatile clip mounts to any surface.
Ideal for air conditioning line sets.

Channel

Rod

Surface

Key Features

- Fits directly to a wall or solid ceiling
- Hinged for rapid pipe installation
- Space for electrical cables and condensate hose
- Zinc and colour passivated to resist corrosion
- Wide metal components for good pipe support

SPECIFICATIONS	
Materials of construction	Zinc passivated mild steel
Max. rec. distance per clip	1,2 m
Max. temp	1000 °C

SIZING OPTIONS						
Size	Liquid*	Gas*	Width (mm)	Height (mm)	Part No.	
Size 1	6 mm (1/4 ")	13 mm (1/2 ")	54	30	B6186/10	10
Size 2	10 mm (3/8 ")	16 mm (5/8 ")	60	32	B6187/10	10
Size 3	13 mm (1/2 ")	22 mm (7/8 ")	67	37	B6188/10	10
Size 4	16 mm (5/8 ")	28 mm (1 1/8 ")	80	46	B6189/10	10

* Approximate pipe sizes (allowing for 13mm insulation)

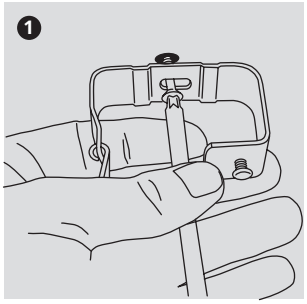

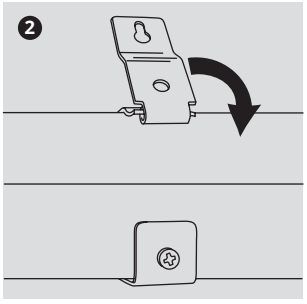

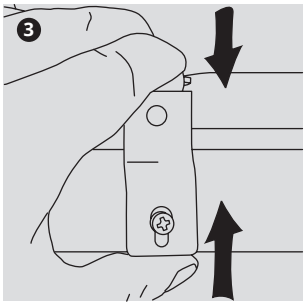

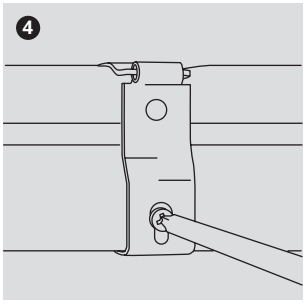

Information correct at time of going to press. Not all products are available in all regions. This document has been translated using AI and may contain inaccuracies.

CONDENSATION PREVENTION TAPE

Supplied in two versions (rubber or polyethylene). Class1 fire rating. Operating emperature: -15°C /+80°C.



	Part No.	Dimensions
Rubber	9898-500	50 x 3 mm x 10 m
Gray Polyethylene	9898-501	50 x 3 mm x 10 m
White Polyethylene	9898-503	50 x 3 mm x 10 m

Self-adhesive, condensation prevention aluminum tape with strong glue. Class 1 fire rating. Operating temperature: From -15°C /+80°C.



	Part No.	Dimensions
Aluminium	9898-400	50 x 3 mm x 10 m
Reinforced Aluminum Tape	9898-401	50 x 3 mm x 10 m

VECAMCO

VINYL TAPE

Non-adhesive elastic PVC rolls. Quick and easy to install, excellent acid resistance.

Part No.	Dimensions
9898-550-01	60m - h. 10 cm
9898-551-01	25m - h. 10 cm



- External protective coating for insulated pipes
- Protection of underground pipes against oxidation and stray currents
- Protection of parts of manufactured items not to be treated in galvanic baths (e.g. chrome plating, zinc plating, etc.)
- Not recommended for use on pipes exposed to direct sunlight.

VECAMCO

Information correct at time of going to press. Not all products are available in all regions. This document has been translated using AI and may contain inaccuracies.

DrainKleen®

CONDENSATE DRAIN UNBLOCKER

- Ready to use
- Aerosol
- Concentrate
- Condensate pump safe

- Clears organic blockages
- Heavier than water – sinks to reach blockage site

Part No.	Product	Qty	Size
S010188	DrainKleen	4	5L

Hazardous transport.



DrainKleen® one shot

CONDENSATE DRAIN CLEANER & UNBLOCKER

- Ready to use
- Aerosol
- Concentrate
- Condensate pump safe

- Clears common blockages
- User friendly design for hard to reach areas

Part No.	Product	Qty	Size
S010106	DrainKleen one shot	12	250ml

Hazardous transport.



AdvancedGel DU

CONDENSER DRAIN UNBLOCKER

NSF
Nonfood Compounds Program Listed

- Ready to use
- Aerosol
- Concentrate
- Condensate pump safe

- Heavy-duty formula clears organic and inorganic blockages
- Heavier than water, it will sink and find the blockage
- Safe to use with condensate pumps
- Makes 8 litres

Part No.	Product	Qty	Size
S010461R1	AdvancedGel DU	5	490 ml

Complies with EN1040, EN1275, EN1276 et EN14476.



Advanced

Information correct at time of going to press. Not all products are available in all regions. This document has been translated using AI and may contain inaccuracies.

09 TRUNKING

Trunking Lengths	164-165
Trunking Fittings	166-167
Accessories	168

ASPEN PUMPS GROUP

EUROSPLIT

OUR INNOVATIVE TRUNKING RANGE



The next evolution in trunking solutions. Effortless compatibility with industry-leading systems, engineered for performance and ease.

EuroSplit is the brand-new trunking solution with enhanced performance and a sleek design.

- Available in 6 sizes
- The 80×60 size, is directly compatible with the most widely used brands
- Complete protection film everywhere and high quality packaging
- Customisation service to answer to all your needs



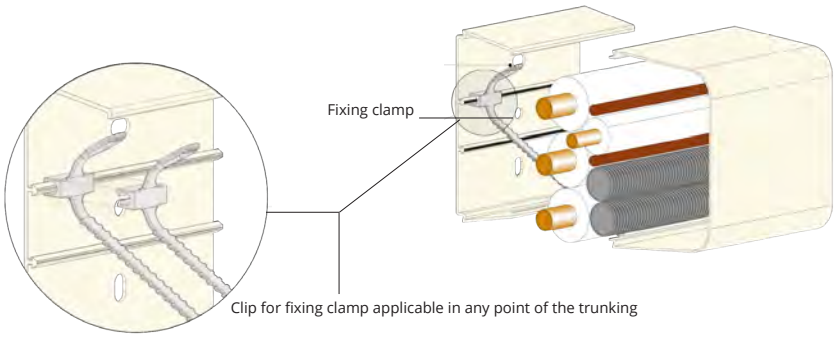

Size (mm) L x H	Description					Technical data
	Pure White 08	Signal White 11	Light Ivory 15	Anthracite Grey 16	Black 95	
65 x 50	No film: 9841-001-08 With film: 9841-002-08	No film: 9841-001-11 With film: 9841-002-11	No film: 9841-001-15 With film: 9841-002-15			
70 x 55	No film: 9844-001-08 With film: 9844-002-08	No film: 9844-001-11 With film: 9844-002-11	No film: 9844-001-15 With film: 9844-002-15			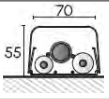
80 x 60	No film: 9855-002-08 With film: 9855-002-08	No film: 9855-001-11 With film: 9855-002-11	No film: 9855-001-15 With film: 9855-002-15	No film: 9855-001-16 With film: 9855-002-16	No film: 9855-105-95 With film: 9855-107-95	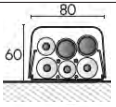
90 x 65	No film: 9842-002-08 With film: 9842-002-08	No film: 9842-001-11 With film: 9842-002-11	No film: 9842-001-15 With film: 9842-002-15			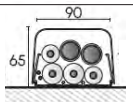
110 x 75	No film: 9846-002-08 With film: 9846-002-08	No film: 9846-001-11 With film: 9846-002-11	No film: 9846-001-15 With film: 9846-002-15			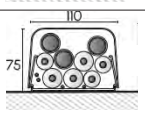
125 x 75	No film: 9843-002-08 With film: 9843-002-08	No film: 9843-001-11 With film: 9843-002-11	No film: 9843-001-15 With film: 9843-002-15			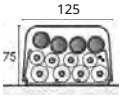

Information correct at time of going to press. Not all products are available in all regions. This document has been translated using AI and may contain inaccuracies.

CLIMA PLUS

Clima Plus trunking is aesthetically compact, and complements any installation.
- Available in 5 sizes
- Total coverage with minimum space, perfect housing of condensate drain pipes
- Speed of assembly
- No waste of space for perfect containment capacity.

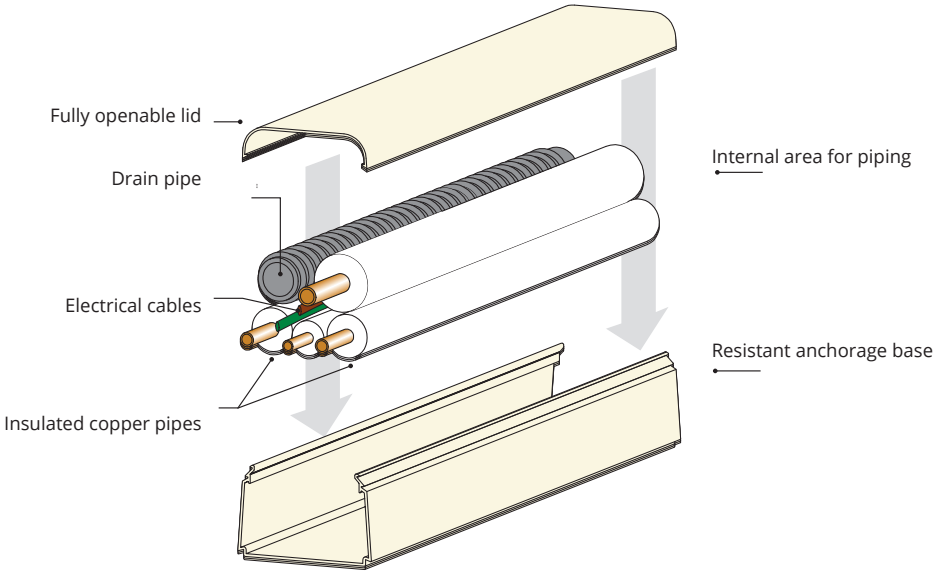

	Description			
Size (mm) L x H	Pure White 08	Signal White 11	Light Ivory 15	Technical data
65 x 50	No film: 9801-001-08 With film: 9801-002-08	No film: 9801-001-11 With film: 9801-002-11	No film: 9801-001-15 With film: 9801-002-15	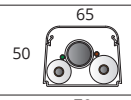
70 x 55	No film: 9804-001-08 With film: 9804-002-08	No film: 9804-001-11 With film: 9804-002-11	No film: 9804-001-15 With film: 9804-002-15	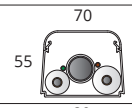
80 x 60	No film: 9805-001-08 With film: 9805-002-08	No film: 9805-001-11 With film: 9805-002-11	No film: 9805-001-15 With film: 9805-002-15	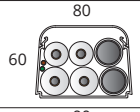
90 x 65	No film: 9802-001-08 With film: 9802-002-08	No film: 9802-001-11 With film: 9802-002-11	No film: 9802-001-15 With film: 9802-002-15	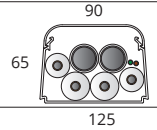
125 x 75	No film: 9803-001-08 With film: 9803-002-08	No film: 9803-001-11 With film: 9803-002-11	No film: 9803-001-15 With film: 9803-002-15	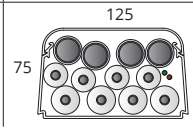

Information correct at time of going to press. Not all products are available in all regions. This document has been translated using AI and may contain inaccuracies.

Accessories for EuroSplit and Clima Plus

Size (mm)		Description					Qty
	L x H	Pure White 08	Signal White 11	Light Ivory 15	Anthracite Grey 16	Black 95	
COUPLER							
	65 x 50	9801-102-08	9801-102-11	9801-102-15			25 pcs
	70 x 55	9804-102-08	9804-102-11	9804-102-15			
	80 x 60	9805-102-08	9805-102-11	9805-102-15	9805-102-16	9805-102-95	
	90 x 65	9802-102-08	9802-102-11	9802-102-15			
	110 x 75	9806-102-08	9806-102-11	9806-102-15			
	125 x 75	9803-102-08	9803-102-11	9803-102-15			
COUPLER WITH SEALED GASKET							
	65 x 50	9801-103-08	9801-103-11	9801-103-15			20 pcs
	70 x 55	9804-103-08	9804-103-11	9804-103-15			
	80 x 60	9805-103-08	9805-103-11	9805-103-15	9805-103-16	9805-103-95	
	90 x 65	9802-103-08	9802-103-11	9802-103-15			
	* available only in pure white						
WALL FLANGE							
	65 x 50	9801-111--08	9801-111-11	9801-111--15			10 pcs
	70 x 55	9804-111-08	9804-111-11	9804-111-15			
	80 x 60	9805-111-08	9805-111-11	9805-111-15	9805-111-16	9805-111-95	
	90 x 65	9802-111-08	9802-111-11	9802-111-15			
	110 x 75	9806-111-08	9806-111-11	9806-111-15			
	125 x 75	9803-111-08	9803-111-11	9803-111-15			
INSIDE ELBOW							
	65 x 50	9801-112-08	9801-112-11	9801-112-15			10 pcs
	70 x 55	9804-112-08	9804-112-11	9804-112-15			
	80 x 60	9805-112-08	9805-112-11	9805-112-15	9805-112-16	9805-112-95	
	90 x 65	9802-112-08	9802-112-11	9802-112-15			
	110 x 75	9806-112-08	9806-112-11	9806-112-15			
	125 x 75	9803-112-08	9803-112-11	9803-112-15			
OUTSIDE ELBOW							
	65 x 50	9801-113-08	9801-113-11	9801-113-15			10 pcs
	70 x 55	9804-113-08	9804-113-11	9804-113-15			
	80 x 60	9805-113-08	9805-113-11	9805-113-15	9805-113-16	9805-113-95	
	90 x 65	9802-113-08	9802-113-11	9802-113-15			
	110 x 75	9806-113-08	9806-113-11	9806-113-15			
	125 x 75	9803-113-08	9803-113-11	9803-113-15			
T JOINT							
	80 x 60	9805-200-08	9805-200-11	9805-200-15	9805-200-16	9805-200-95	8 pcs
	90 x 65	9802-200-08	9802-200-11	9802-200-15			
	110 x 75	9806-200-08	9806-200-11	9806-200-15			
	125 x 75	9803-200-08	9803-200-11	9803-200-15			

Information correct at time of going to press. Not all products are available in all regions. This document has been translated using AI and may contain inaccuracies.

Size		Part No.					Qty
	L x H	Pure White 08	Signal White 11	Light Ivory 15	Anthracite Grey 16	Black 95	
END COVER							
	65 x 50	9801-114-08	9801-114-11	9801-114-15			10 pcs
	70 x 55	9804-114-08	9804-114-11	9804-114-15			
	80 x 60	9805-114-08	9805-114-11	9805-114-15	9805-114-16	9805-114-95	
	90 x 65	9802-114-08	9802-114-11	9802-114-15			
	110 x 75	9806-114-08	9806-114-11	9806-114-15			
	125 x 75	9803-114-08	9803-114-11	9803-114-15			
FLAT BEND							
	65 x 50	9801-115-08	9801-115-11	9801-115-15			10 pcs
	70 x 55	9804-115-08	9804-115-11	9804-115-15			
	80 x 60	9805-115-08	9805-115-11	9805-115-15	9805-115-16	9805-115-95	
	90 x 65	9802-115-08	9802-115-11	9802-115-15			
	110 x 75	9806-115-08	9806-115-11	9806-115-15			
	125 x 75	9803-115-08	9803-115-11	9803-115-15			
WALL INLET							
	65 x 50	9801-116-08	9801-116-11	9801-116-15			10 pcs
	70 x 55	9804-116-08	9804-116-11	9804-116-15			
	80 x 60	9805-116-08	9805-116-11	9805-116-15	9805-116-16	9805-116-95	
	90 x 65	9802-116-08	9802-116-11	9802-116-15			
	110 x 75	9806-116-08	9806-116-11	9806-116-15			
	125 x 75	9803-116-08	9803-116-11	9803-116-15			
ADJUSTABLE BEND							
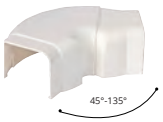	65 x 50	9801-117-08	9801-117-11	9801-117-15			6 pcs
	70 x 55	9804-117-08	9804-117-11	9804-117-15			
	80 x 60	9805-117-08	9805-117-11	9805-117-15	9805-117-16	9805-117-95	
	90 x 65	9802-117-08	9802-117-11	9802-117-15			
FLEXIBLE SLEEVE							
	65 x 50	9801-118-08	9801-118-11	9801-118-15			6 pcs
	70 x 55	9804-118-08	9804-118-11	9804-118-15			
	80 x 60	9805-118-08	9805-118-11	9805-118-15			
	90 x 65	9802-118-08	9802-118-11	9802-118-15			
REDUCER							
	80-65	9801-202-08	9801-202-11	9801-202-15	9801-202-16	9801-202-95	10 pcs
	80-70	9804-202-08	9804-202-11	9804-202-15	9804-202-16	9804-202-95	
	90-65	9802-201-08	9802-201-11	9802-201-15			
	90-70	9804-201-08	9804-201-11	9804-201-15			
	110-80	9805-202-08	9805-202-11	9805-202-15	9805-202-16	9805-202-95	
	110-90	9802-202-08	9802-202-11	9802-202-15			
	125-80	9805-201-08	9805-201-11	9805-201-15	9805-201-16	9805-201-95	
	125-90	9803-201-08	9803-201-11	9803-201-15			
	125-110	9806-201-08	9806-201-11	9806-201-15			

VECAMCO

Information correct at time of going to press. Not all products are available in all regions. This document has been translated using AI and may contain inaccuracies.

VICTOR CUTTER

A new, specially developed tool – with an innovative design – which makes any air conditioning installation faster and easier. Victor guarantees a perfect cut of both duct lid and base: no more imperfections, no more static dust.

- Enables simultaneous cutting
- Suitable for a range of duct/trunking sizes
- Lightweight and portable design
- Specially developed for HVAC

Blades are Sharpenable





Part No.	
9899-990	1 pz

CLIMA PLUS



EUROSPLIT

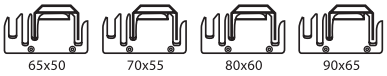

Compatible dimensions

Click per rail



Part No.		
9831-101-00	24 pz	195 mm
9832-101-00	24 pz	215 mm

Information correct at time of going to press. Not all products are available in all regions. This document has been translated using AI and may contain inaccuracies.

10 VENTILATION

Rectangular & Round Grills 170



Image for visual purposes only

ASPEN PUMPS GROUP

Scan here
for full range:

UNIVERSAL GRILLS

Designed to promote air circulation and improve indoor air quality in enclosed environments, while preventing the entry of debris, insects, or other unwanted elements. They are commonly used in buildings as part of the ventilation system and are installed on walls, ceilings, doors, or windows.



Round universal grills



Pair of grills



Round recessed grills



Modular grills



Square universal grills



Grills for doors & furniture



Metal recessed grills

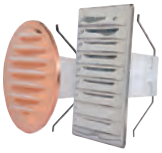

Universal metal grills



Free standing grills



Pop-line grills



Fireplace grills

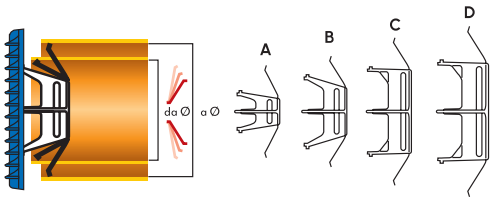

A	Ø 80/125
B	Ø 125/160
C	Ø 160/200
D	Ø 200/260

Key: Foldable springs for grills

MECHANICAL GRILLS

Accessories and components for mechanical controlled ventilation and air treatment.



Extractor fans



Round Extractor fans



ABS Extractor fan



VMC trunking system



Accessories

VECAMCO

Information correct at time of going to press. Not all products are available in all regions. This document has been translated using AI and may contain inaccuracies.

11 INSULATION & ACOUSTIC

Design Box 172
Protection Guards 173
Acoustic Guards 174



ASPEN PUMPS GROUP

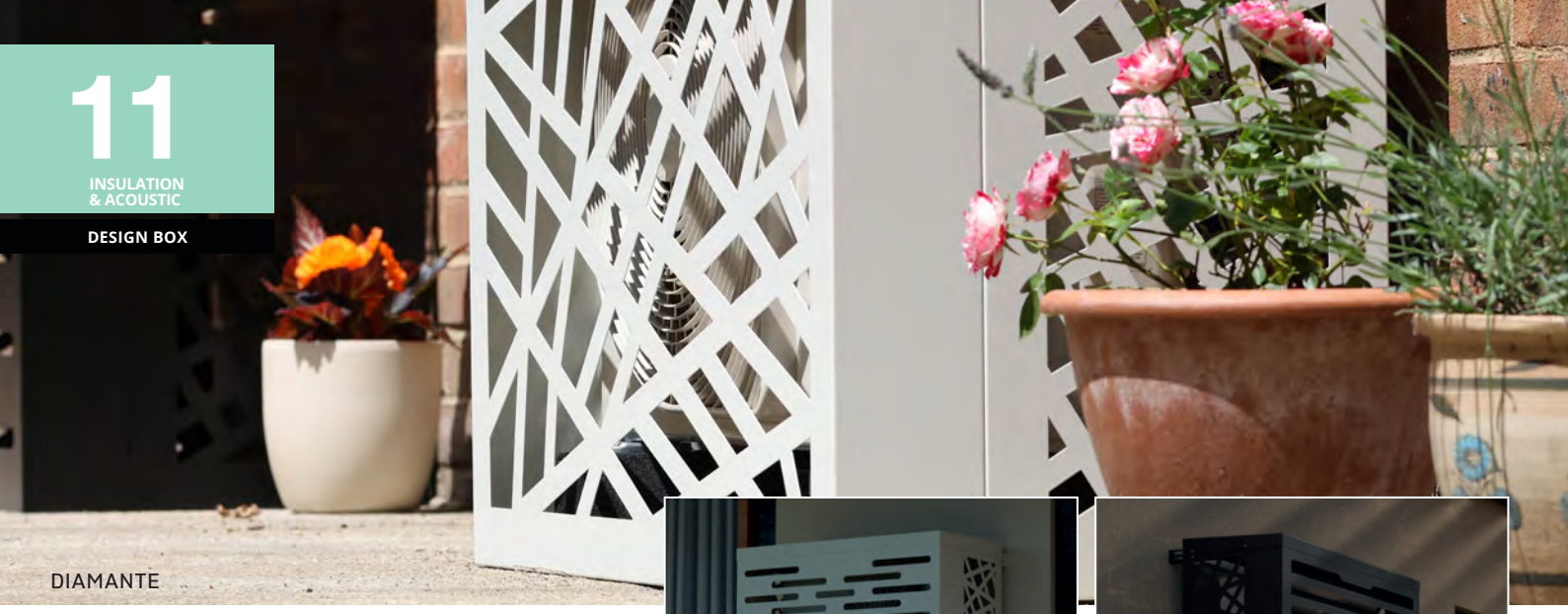
DIAMANTE


AMBRA


GIADA

DESIGN BOX

RAL 9002 RAL 7016 RAL 9005

OUTDOOR CONDENSER UNIT COVER

Protected by a polyester powder coating, resistant to salt spray tests up to 500 hours of application time. Quick and easy assembly in minutes thanks to the quick-release fastening system. Adjustable extensions for convenient wall mounting. With our range of accessories, installation options include floor, wall or stand mounting.

AVAILABLE IN 3 MODELS AND 3 COLOURS!

DIAMANTE

Size	Part No. RAL 9002	RAL 7016	RAL 9005	W x H x D* – mm *D min - max (Extension kit)
S	M38-910-71	M38-910-16	M38-910-95	900 x 680 x 450 - 650
M	M38-911-71	M38-911-16	M38-911-95	1050 x 950 x 650 - 850
L	M38-912-71	M38-912-16	M38-912-95	1150 x 1200 x 650 - 850
XL	M38-915-71	M38-915-16	M38-915-95	1400 x 1200 x 650 - 850
XXL	M38-913-71	M38-913-16	M38-913-95	1400 x 1600 x 650 - 850
3XL	M38-914-71	M38-914-16	M38-914-95	1400 x 2000 x 650 - 850

AMBRA (SOUND PROOFING SYSTEM AVAILABLE)

Size	Part No. RAL 9002	RAL 7016	RAL 9005	W x H x D* – mm *D min - max (Extension Kit)
S	M18-910-71	M18-910-16	M18-910-95	900 x 680 x 450 - 650
M	M18-911-71	M18-911-16	M18-911-95	1050 x 950 x 650 - 850
L	M18-912-71	M18-912-16	M18-912-95	1150 x 1200 x 650 - 850
XL	M18-915-71	M18-915-16	M18-915-95	1400 x 1200 x 650 - 850
XXL	M18-913-71	M18-913-16	M18-913-95	1400 x 1600 x 650 - 850
3XL	M18-914-71	M18-914-16	M18-914-95	1400 x 2000 x 650 - 850

GIADA

Size	Part No. RAL 9002	RAL 7016	RAL 9005	W x H x D* – mm *D min - (Extension Kit)
S	M48-910-71	M48-910-16	M48-910-95	900 x 680 x 450 - 650
M	M48-911-71	M48-911-16	M48-911-95	1050 x 950 x 650 - 850
L	M48-912-71	M48-912-16	M48-912-95	1150 x 1200 x 650 - 850
XL	M48-915-71	M48-915-16	M48-915-95	1400 x 1200 x 650 - 850
XXL	M48-913-71	M48-913-16	M48-913-95	1400 x 1600 x 650 - 850
3XL	M48-914-71	M48-914-71	M48-914-95	1400 x 2000 x 650 - 850

2EMMECLIMA

Information correct at time of going to press. Not all products are available in all regions. This document has been translated using AI and may contain inaccuracies.

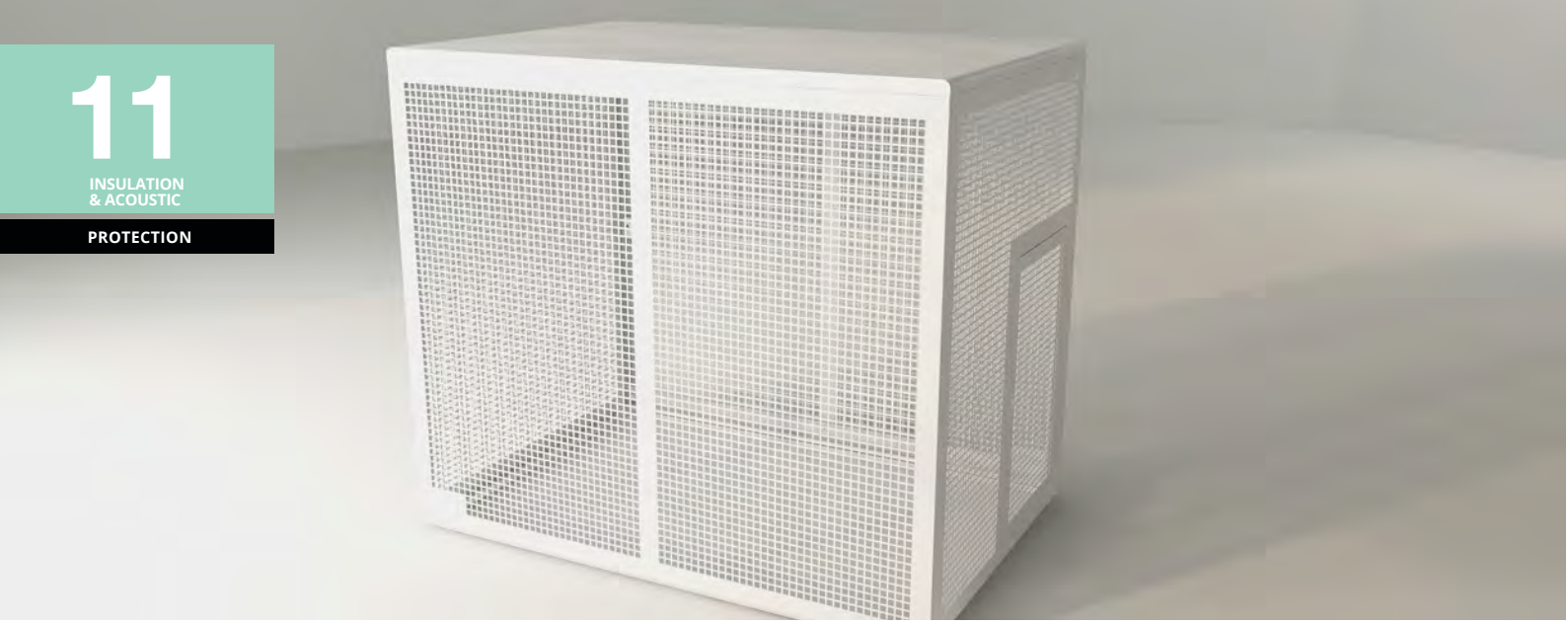

AGATA PROTECTIVE CAGE

RAL 9002 71 / White
RAL 7016 16 / Anthracite
RAL 9005 95 / Black

Protective cage for outdoor air conditioning units and heat pumps. Designed for quick installation and long service life. Thanks to a quick assembly system, no screws are required for installation. The wide range allows for the installation of a large number of units available on the market.

	Part No. RAL 9002	RAL 7016	RAL 9005	W x H x D – mm
S	M58-910-71	M58-910-16	M58-910-95	1050 x 950 x 650
M	M58-911-71	M58-911-16	M58-911-95	1150 x 1200 x 650
L*	M58-912-71	M58-912-16	M58-912-95	1150 x 1600 x 650
XL*	M58-913-71	M58-913-16	M58-913-95	1150 x 2000 x 650
XXL	M58-914-71	M58-914-16	M58-914-95	1400 x 1200 x 950
3XL*	M58-915-71	M58-915-16	M58-915-95	1400 x 1600 x 950
4XL*	M58-916-71	M58-916-16	M58-916-95	1400 x 2000 x 950

* Modular cage: composed of 2 panels

GENERAL FEATURES

- Easy installation thanks to the wall mounting bars supplied with spirit level.
- No screws for mounting or friction points, reducing the risk of rust formation.
- Epoxy powder coating for outdoor use, resistant to salt spray tests for up to 500 hours.
- Wide range of sizes available to cover all types of air conditioners and heat pumps.
- Inspection and maintenance door with square lock for access to the outdoor unit.
- 4 pre-drilled holes for pipes and cables.
- Available in three different colours: White RAL9002, Black RAL9005, Anthracite RAL7016.
- Hidden security system: allows the panels and cover to be screwed together if necessary.
- Optional rear panel for complete closure with the possibility of fixing to the ground.
- Optional condensate collection tray.

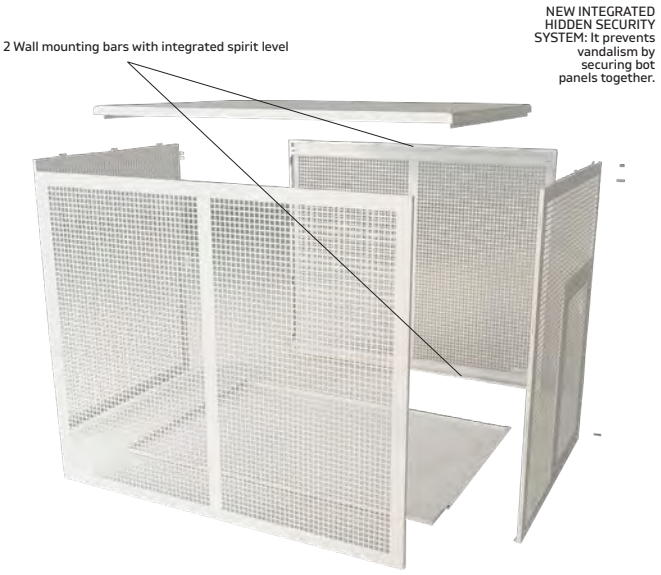

BUILDING MATERIALS

- Galvanised steel.

PRODUCTION PROCESS

- Punching.
- Laser cutting.
- Bending.
- Powder coating.

Back Panels	Part No. RAL 9002	RAL 7016	RAL 9005
S	M58-PS910-71	M58-PS910-16	M58-PS910-95
M	M58-PS911-71	M58-PS911-16	M58-PS911-95
L	M58-PS912-71	M58-PS912-16	M58-PS912-95
XL	M58-PS913-71	M58-PS913-16	M58-PS913-95
XXL	M58-PS914-71	M58-PS914-16	M58-PS914-95
3XL	M58-PS915-71	M58-PS915-16	M58-PS915-95
4XL	M58-PS916-71	M58-PS916-16	M58-PS916-95

Metal Trays	Part No. RAL 9002	RAL 7016	RAL 9005
S	M38-111-71	M38-111-16	M38-111-95
M, L, XL	M38-112-71	M38-112-16	M38-112-95
XXL, 3XL, 4XL	M38-116-71	M38-116-16	M38-116-95

2EMMECLIMA

Information correct at time of going to press. Not all products are available in all regions. This document has been translated using AI and may contain inaccuracies.



HT12 dB(A) Range

Acoustic enclosure up to 12 dB(A) sound reduction, measured according to DIN EN ISO 3744.

- Designed to reduce the noise emissions of refrigeration, air conditioners and heat pumps without compromising functionality
- Ingenious intake and exhaust air separation for optimum efficiency of the built-in outdoor unit
- Service and maintenance access possible
- Protection against weather and vandalism
- Can be adapted in colour to the environment
- Construction in Self-healing Magnelis: corrosion proof
- Sloped roof for rainwater drainage

ACOUSTIC HOUSING

2 models: rear air intake or lateral air intake

Easy installation HT100NP Rear air intake

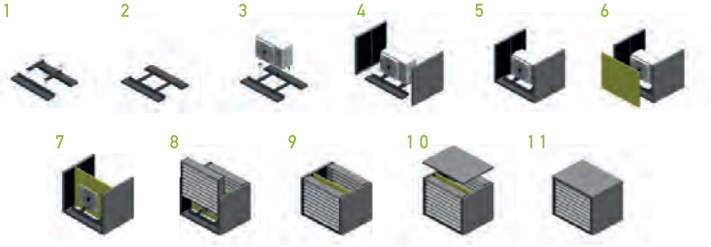

Detailed installation manual available on www.solflex.eu

Easy installation HT100NP Lateral air intake

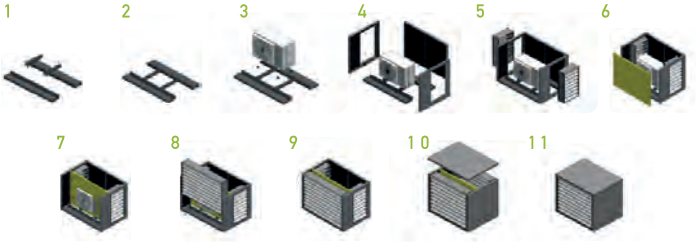



Sound insulation HT acoustic housing

Frequency (Hz)	63	125	250	500	1000	2000	4000	8000	16000
Sound insulation dB(A)	2	1	4	7	12	18	18	16	18

Solflex Type		Housing dimensions H x W x D [mm]	Weight [kg]	Max. dimensions for installation * H x W x D [mm]
Principle: rear intake, front exhaust				
HT100NP	Magnelis	1080 x 1210 x 910	140	1010 x 1100 x 450
HTX100NP		1080 x 1510 x 910	170	1010 x 1400 x 450
HTY100NP		1280 x 1210 x 910	160	1210 x 1100 x 450
HTXY100NP		1280 x 1510 x 910	180	1210 x 1400 x 450
HT200NP		1620 x 1210 x 910	200	1550 x 1100 x 450
HTX200NP		1620 x 1510 x 910	230	1550 x 1400 x 450
HTY200NP		1820 x 1210 x 910	220	1750 x 1100 x 450
HTXY200NP		1820 x 1510 x 910	250	1750 x 1400 x 450
HT100NPVI		1080 x 1400 x 1150	170	1010 x 1250 x 700
HTX100NPVI		1080 x 1700 x 1150	200	1010 x 1550 x 700
HTY100NPVI		1280 x 1400 x 1150	200	1210 x 1250 x 700
HTXY100NPVI		1280 x 1700 x 1150	230	1210 x 1550 x 700
HT200NPVI		1680 x 1400 x 1150	230	1610 x 1250 x 700
HTX200NPVI		1680 x 1700 x 1150	260	1610 x 1550 x 700
HTY200NPVI		1880 x 1400 x 1150	250	1810 x 1250 x 700
HTXY200NPVI		1880 x 1700 x 1150	280	1810 x 1550 x 700
Principle: lateral intake, front exhaust				
HT100NPS A	Magnelis	1080 x 1510 x 910	140	1010 x 1100 x 450
HTX100NPSA		1080 x 1810 x 910	170	1010 x 1400 x 450
HTY100NPSA		1280 x 1510 x 910	160	1210 x 1100 x 450
HTXY100NPSA		1280 x 1810 x 910	180	1210 x 1400 x 450
HT200NPSA		1620 x 1510 x 910	200	1550 x 1100 x 450
HTX200NPSA		1620 x 1810 x 910	30	1550 x 1400 x 450
HTY200NPSA		1820 x 1510 x 910	220	1750 x 1100 x 450
HTXY200NPSA		1820 x 1810 x 910	250	1750 x 1400 x 450
HT100NPS AVI		1080 x 1700 x 1150	170	1010 x 1250 x 700
HTX100NPS AVI		1080 x 2000 x 1150	200	1010 x 1550 x 700
HTY100NPS AVI		1280 x 1700 x 1150	200	1210 x 1250 x 700
HTXY100NPS AVI		1280 x 2000 x 1150	230	1210 x 1550 x 700
HT200NPS AVI		1680 x 1700 x 1150	230	1610 x 1250 x 700
HTX200NPS AVI		1680 x 2000 x 1150	260	1610 x 1550 x 700
HTY200NPS AVI		1880 x 1700 x 1150	250	1810 x 1250 x 700
HTXY200NPS AVI		1880 x 1700 x 1150	280	1810 x 1550 x 700

* The dimensions of the outdoor unit to be installed must be checked individually. For details, refer to the installation manual.

SOLFLEX

Information correct at time of going to press. Not all products are available in all regions. This document has been translated using AI and may contain inaccuracies.

12 ELECTRICAL



Isolators 176-177
Accessories 178

ASPEN PUMPS GROUP



Isolator

Designed with the installer in mind. Large range of models and separate back plate for installation ease.

Key Features

- Separate back plate with spirit level for ease of installation
- 9 models available
- Surface mountable (with and without back plate)
- Removable switch for ease of wiring
- IP66 rated for interior and exterior use
- Lockable 'OFF' position (up to 2 padlocks) and 'ON' position (1 padlock), to prevent unauthorised access
- Fully compliant to IEC 60947-3
- 5 cable entry knock-outs
- Supplied with 2 cable glands

Small 20 A / 32 A

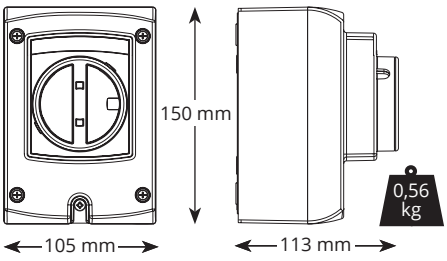

Large 40 A / 63 A

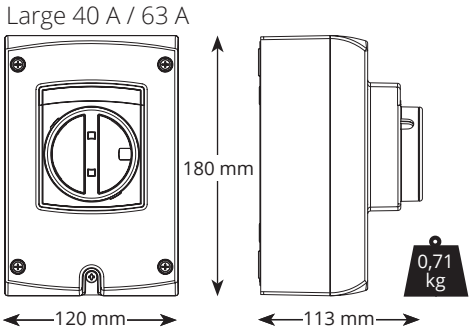

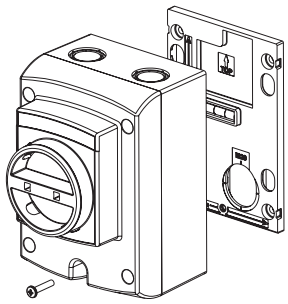

SPECIFICATIONS	
Rated	415V AC
IP Protection	IP66

Raw material: Rigid, self-extinguishing, impact-resistant and UV-stabilised PVC.

SIZING OPTIONS	
Description	Part No.
3-pole 20 A (small)	AX6101/2
3-pole 32 A (small)	AX6102/2
3-pole 40A (large)	AX6103/2
4-pole 20 A (small)	AX6001/2
4-pole 25 A (small)	AX6005/2
4-pole 32A (small)	AX6002/2
4-pole 40A (large)	AX6003/2
4-pole 63A (large)	AX6004/2

IN THE BOX

• Isolator • Back plate with spirit level
• M4 x 20mm screw • Install manual
• 2 x M20 glands & nuts (Small Isolator)
• 2 x M25 glands & nuts (Large Isolator)

Information correct at time of going to press. Not all products are available in all regions. This document has been translated using AI and may contain inaccuracies.



Isolator

Designed for versatility and ease, our isolator range features simple installation, multiple size options, and universal voltage compatibility—making it the smart choice for any HVAC setup.

Key Features

- Easy installation
- Compact and reliable
- Installation without penetrating the IP-rated enclosure
- 1 year guarantee

Large 40-63 Amp 4 Pole

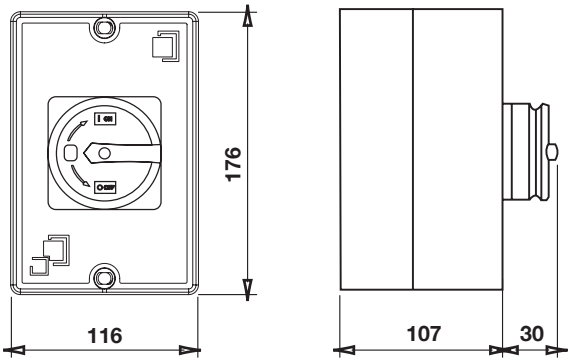

Small 20-32 Amp 4 Pole

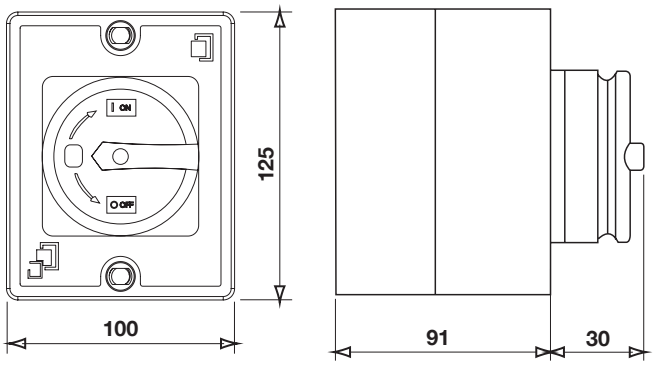

SIZING OPTIONS		
Description	Part No.	Rating
Small 20 Amp 4 Pole	BK20A4P	AC21-20A/AC23A-5.5KW
Small 25 Amp 4 Pole	BK25A4P	AC21-25A/AC23A-7.5KW
Small 20-32 Amp 4 Pole	BK2032A4P	AC21-32A/AC23A-11KW
Large 40 Amp 4 Pole	BK40A4P	AC21-63A/AC23A-22KW
Large 40-63 Amp 4 Pole	BK4063A4P	AC21-40A/AC23A-15KW
Small 20 Amp 3 Pole	BK20A3P	AC21-20A/AC23A-5.5KW
Small 32 Amp 3 Pole	BK32A3P	AC21-32A/AC23A-11KW
Large 40 Amp 3 Pole	BK40A3P	AC21-40A/AC23A-15KW

SPECIFICATIONS	
IP Protection	IP65

IN THE BOX

Small Isolator includes 2x M20 Cable glands
Large Isolator includes 2x M20 Cable glands

beckett®

Information correct at time of going to press. Not all products are available in all regions. This document has been translated using AI and may contain inaccuracies.



Electrical Accessories

Mini Pumps

1 AMP FUSE AND HOLDER

Part No.
FP2620

(2 per pack)



Persitaltic Pumps

ULTRA BLACK+ CABLE

Part No.
FP3386



ULTRA BLACK AIR CABLE

Part No.
FP3388



ULTRA BLACK+ SENSOR/RESERVOIR

Part No.
FP3387



ULTRA BLACK AIR TEMP. SENSOR

Part No.
FP3389



Xtra





ES-6 | HEAVY DUTY 6” ELECTRICIANS SCISSORS

- Ultra tough 6” professional electricians scissors (160mm)
- Whole steel frame for high resistance & durability
- Industrial strength polypropylene handles
- With full TPR coating for superior grip & comfort
- High grade 4034 Japanese stainless steel 4.0mm thick polished blades with 40mm cutting edge
- Black ‘DLC’ (diamond-like-carbon) coating on blades for extra sharpness
- High hardness blades (58±2 HRC) with anti-slip serrated edge
- 2.5mm² & 1.5mm² wire strippers & wire crimping terminal
- Notch in the blades for cutting/stripping 50mm² cable
- Includes heavy duty nylon clip-on belt sheath
- Suitable for cutting aluminium, copper and soft cable
- Weight 153g | Dimensions Length: 160mm | Blade Length: 40mm

UNILITE

Information correct at time of going to press. Not all products are available in all regions. This document has been translated using AI and may contain inaccuracies.

13 MAINTENANCE



Evaporator	180-181
Condenser	182
Universal	183
Drain Maintenance	184
Refrigeration & Ice Machines	185
Specialist Chemicals	186-188
Accessories	189-191
Heat Pump Cleaners	192

ASPEN PUMPS GROUP



Biocide FREE

PurAire

EVAPORATOR CLEANER AND DEODORISER

Available in three formats, Advanced PurAire combats tough odours and grease while improving indoor air quality with an eco-friendly solution, comprehensive root cause treatment, and high-definition cleaning for lasting freshness.

- Active hydrophilic no-rinse technology
- Comprehensive root cause treatment
- High definition cleaning and freshness
- Rapidly emulsifies and removes grease, nicotine, grime and smelly dirt
- Easy to use with excellent performance
- Improved energy efficiency and indoor air quality
- NSF approved
- Available in three handy formats

Condensate pump safe

NSF approved

Part No.	Product	Qty	Size
S010197R1	PurAire Ready To Use	8	1L
S010126R1	PurAire Aerosol	12	600ml
S010160R1	PurAire Concentrate	4	5L

AdvancedGel EC

EVAPORATOR CLEANER

Ready to use

Aerosol

Concentrate

Condensate pump safe

- Powerful cleaning action will remove dirt from all waterproof surfaces effortlessly
- Improves energy efficiency of unit
- All in one indoor degreaser

Code	Product	Qty	Size
S010458R1	AdvancedGel EC	5	490 ml



Advanced

Information correct at time of going to press. Not all products are available in all regions. This document has been translated using AI and may contain inaccuracies.

OdourGuard

ODOUR ELIMINATOR FOR A/C SYSTEMS



Ready to use

Aerosol

Concentrate

Condensate pump safe

- Continuous guard against odour release to ensure 360° protection for filters, AHUs and duct work
- Long lasting, subtle and naturally clean fragrance
- Compliments anti-viral protectors e.g. Advanced CondenCide and RTU ECD (ISO 18184:20189)

Code	Product	Qty	Size
S090070R1	OdourGuard	8	1L

Hazardous transport.

EasyFresh®

ODOUR NEUTRALISER FOR AC SYSTEMS



Ready to use

Aerosol

Concentrate

Condensate pump safe

- Specifically designed for air conditioning units
- Eliminates odours
- Produces a long-lasting fresh scent

Part No.	Product	Qty	Size
S090049	EasyFresh	12	400ml

Hazardous transport.

Advanced

Information correct at time of going to press. Not all products are available in all regions. This document has been translated using AI and may contain inaccuracies.

SuperClean™

HEAVY-DUTY CONDENSER CLEANER

Ready to use
Aerosol
Concentrate
Condensate pump safe

- Powerful foaming action that brightens the coil and inhibits future oxidation
- Just as powerful as an acid-based cleaner, but safer to use
- Strongest coil cleaner in the market, unique formulation
- Makes 25 litres

Part No.	Product	Qty	Size
S010171	SuperClean	4	5L

Hazardous transport.



*Dilution: 3:1

EasyFoam®

FOAMING CONDENSER CLEANER

Ready to use
Aerosol
Concentrate
Condensate pump safe

- Powerful formulation makes it ideal for removing stubborn dirt from problem coils
- Perfect for deep, multi-row condensers
- Part of our Easy range of products

Part No.	Product	Qty	Size
S010132	EasyFoam	12	600ml

Hazardous transport.



RTU CC®

CONDENSER CLEANER

Ready to use
Aerosol
Concentrate
Condensate pump safe

- Convenient non foaming ready-to-use cleaner
- Improves system efficiency
- Great as part of a regular maintenance programme

Part No.	Product	Qty	Size
S010195	RTU CC	8	1L
S010191	RTU CC	4	5L



Advanced

Information correct at time of going to press. Not all products are available in all regions. This document has been translated using AI and may contain inaccuracies.

VerteX®

NEUTRAL PH 7 CONDENSER & EVAPORATOR CLEANER

Nonfood Compounds Program Listed



- Ready to use
- Aerosol
- Concentrate
- Condensate pump safe

- Non corrosive – neutral pH 7 adaptive cleaner
- Quickly removes rust, scale, grease and fat
- Ideal for microchannel and coils with protective coatings
- Neutralises all unpleasant malodour
- Makes 25-45 litres*

Part No.	Product	Qty	Size
S010389	VerteX	4	5L

*1:8 - Evaporators.1:4 - Condensers.

EasyClean™

UNIVERSAL COIL CLEANER



- Ready to use
- Aerosol
- Concentrate
- Condensate pump safe

- Suitable for use on both air cooled evaporators and condensers
- Convenient, high powered aerosol with a safe formulation
- Attacks only the dirt, not the coil

Part No.	Product	Qty	Size
S010128	EasyClean	12	600ml

Hazardous transport.

StayClean® Detergent Tablets

CONDENSATE TRAY BACTERIAL CONTROL



- Ready to use
- Aerosol
- Concentrate
- Condensate pump safe

- Preventive anti-bacterial treatment for condensate tanks
- Controls odours
- Reduces sludge build-up
- Minimises risk of blockages
- Up to 8 weeks protection

Part No.	Qty	Size
S010105	20 tablets	1 pot

Advanced

Information correct at time of going to press. Not all products are available in all regions. This document has been translated using AI and may contain inaccuracies.

DrainKleen®

CONDENSATE DRAIN UNBLOCKER



- Ready to use
- Aerosol
- Concentrate
- Condensate pump safe

- Clears organic blockages
- Heavier than water – sinks to reach blockage site

Part No.	Product	Qty	Size
S010188	DrainKleen	4	5L

Hazardous transport.

DrainKleen® one shot

CONDENSATE DRAIN CLEANER & UNBLOCKER



- Ready to use
- Aerosol
- Concentrate
- Condensate pump safe

- Clears common blockages
- User friendly design for hard to reach areas

Part No.	Product	Qty	Size
S010106	DrainKleen one shot	12	250ml

Hazardous transport.

AdvancedGel DU

CONDENSER DRAIN UNBLOCKER

NSF Nonfood Compounds Program Listed



- Ready to use
- Aerosol
- Concentrate
- Condensate pump safe

- Heavy-duty formula clears organic and inorganic blockages
- Heavier than water, it will sink and find the blockage
- Safe to use with condensate pumps
- Makes 8 litres

Code	Product	Qty	Size
S010461R1	AdvancedGel DU	5	490 ml

Complies with EN1040, EN1275, EN1276 et EN14476.

Advanced

Information correct at time of going to press. Not all products are available in all regions. This document has been translated using AI and may contain inaccuracies.

Jally® Strips

FOR CONDENSATE TRAYS

Ready to use
Aerosol
Concentrate
Condensate pump safe

- Slime dispersing action for refrigeration systems
- 12 months protection
- Safe to use in food preparation areas

Part No.	Product	Qty	Size
S010370	Jally Strips	1	50 strips
S010371	Jally Strips	1	6 strips

Hazardous transport.

NSF Nonfood Compounds Program Listed

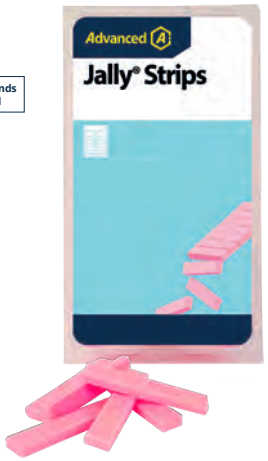

Ice 'n' Clean®

ICE MACHINE CLEANER

Ready to use
Aerosol
Concentrate
Condensate pump safe

- Clears heavy limescale and slime deposits
- Nickel and aluminium safe – suitable for all ice machines
- Colour indicator ensures product is completely flushed
- New odourless formula

Part No.	Product	Qty	Size
S010169	Ice 'n' Clean	4	5L

NSF Nonfood Compounds Program Listed



AdvancedGel IMC

ICE MACHINE CLEANER

Ready to use
Aerosol
Concentrate
Condensate pump safe

- Clears heavy limescale and slime deposits
- Nickel and aluminum safe – suitable for all ice machines
- Colour indicator ensures product is completely flushed
- Cleans 1 unit

Code	Product	Qty	Size
S010460R1	AdvancedGel IMC	5	490 ml

NSF Nonfood Compounds Program Listed



Advanced

Information correct at time of going to press. Not all products are available in all regions. This document has been translated using AI and may contain inaccuracies.

RTU® BU

BUBBLE-UP LEAK DETECTOR

Ready to use
Aerosol
Concentrate
Condensate pump safe

- Specifically designed for refrigerant leaks
- Produces long-lasting bubbles
- Clings to all surfaces

Part No.	Product	Qty	Size
S010173	RTU BU	8	1L

Hazardous transport.



EasyFind®

BUBBLE-UP LEAK DETECTOR

Ready to use
Aerosol
Concentrate
Condensate pump safe

- Specifically designed for refrigerant leaks
- Produces long-lasting bubbles
- Clings to all surfaces

Part No.	Product	Qty	Size
S010350	EasyFind	12	400ml

Hazardous transport.



EasyFinish®

FASCIA & CASE CLEANER

Ready to use
Aerosol
Concentrate
Condensate pump safe

- Suitable for most air conditioning units
- Safely removes finger marks etc. from plastic and metal casework
- Easily removes stubborn nicotine, grease & general grime
- Part of our Easy range of products

Part No.	Product	Qty	Size
S010131	EasyFinish	12	600ml

Hazardous transport.



Advanced

Information correct at time of going to press. Not all products are available in all regions. This document has been translated using AI and may contain inaccuracies.

EndoFlush®

INTERNAL COIL & SYSTEM CLEANER

- Ready to use
- Aerosol
- Concentrate
- Condensate pump safe

- For use after burnouts, before component changes or when retrofitting
- Will flush away sludge, carbon residues, acids, oils and water
- Low viscosity – flows easily

Part No.	Product	Qty	Size
S010190	EndoFlush	4	5L



EasyCoat™

ACRYLIC PROTECTIVE COATING FOR COILS

- Ready to use
- Aerosol
- Concentrate
- Condensate pump safe

- Effective corrosion protection for coils
- Indicator dye helps ensure complete coverage
- Rapid drying

Part No.	Product	Qty	Size
S010129	EasyCoat	12	600ml

Hazardous transport.



ScalePro™

LIMESCALE REMOVER FOR ADIABATIC CONDENSERS

- Ready to use
- Aerosol
- Concentrate
- Condensate pump safe

- Rapidly removes scale from condenser coils
- Restores system efficiency
- Safe on aluminium coils
- Perfect for adiabatic coolers

Part No.	Product	Qty	Size
S010147	ScalePro	4	5L



Advanced

Information correct at time of going to press. Not all products are available in all regions. This document has been translated using AI and may contain inaccuracies.

PyroCool®

FLAME RETARDANT GEL

- Ready to use
- Aerosol
- Concentrate
- Condensate pump safe

- Protects all surfaces and parts close to brazing, soldering and welding
- Reduces risk of fire by protecting surfaces and dissipating heat
- Suitable for copper, steel and aluminium pipework



Part No.	Product	Qty	Box Qty	Size
S050021	PyroCool	1	8	500ml
S050004	PyroCool	1	8	1L

SmellyJelly®

FRAGRANCING GEL

- Mini size: suitable for small fan coil units
- Size 1: suitable for large fan coil and cassette units





Part No.	Product	Qty	Size
S090017	SmellyJelly Citrus	20 cards	Mini
S090018	SmellyJelly Floral	20 cards	Mini
S090050	SmellyJelly Apple	20 cards	Mini
S090020	SmellyJelly Morning	20 cards	Mini
S090021	SmellyJelly Mountain	20 cards	Mini
S090057	SmellyJelly Orange	20 cards	Mini
S090054 MWE	SmellyJelly Mixed	20 cards	Mini

Advanced

Information correct at time of going to press. Not all products are available in all regions. This document has been translated using AI and may contain inaccuracies.

HydroSprayer®

CLEANER APPLICATOR

- Heavy duty low-pressure sprayer
- Suitable for use with all Advanced coil cleaner concentrates
- Full range of spares available

Part No.	Product	Qty	Size
S010107	HydroSprayer	1	8L
S010138	Replacement Seal Kit	1	–
S010139	Pump Assembly	1	–
S010140	Lance Assembly (includes nozzle)	1	–
S010141	Handle Assembly	1	–
S010142	Pressure Relief Valve	1	–
S010143	Lance, Nozzle & Hose Assembly	1	–



HydroSprayer®-Elite

BATTERY-POWERED ELECTRIC SPRAYER

- 15L tank capacity which is packaged as a back pack with supportive straps
- A 12V long-life rechargeable battery
- Powerful automatic pump that produces 60 psi at the squeeze of a trigger
- Use with Advanced concentrated and ready-mixed coil cleaner chemicals, both indoors and outdoors

Part No.	Product	Qty	Size
S010450	Hydrosprayer-Elite	1	15L

The HydroSprayer-Elite is NOT suitable for use with ScalePro as the hydrochloric acid will dissolve the soft PVC parts, such as gaskets and the pump membrane.



Advanced

Information correct at time of going to press. Not all products are available in all regions. This document has been translated using AI and may contain inaccuracies.

Squeezy™

PUMP PRIMING BOTTLE

The Squeezy pump priming bottle is the ideal contracting and service tool for checking all aspects of condensate removal.

- Allows you to check that the condensate removal pump is operating correctly
- The gooseneck spout makes it easy for the technician to dose in difficult places



Code	Product	Qty	Size
S010149	Squeezy	6	1L

EasyWipes™

PROFESSIONAL GRADE HAND WIPES

EasyWipes are professional hand wipes containing powerful yet safe cleaning agents. These convenient wipes dissolve and absorb dirt, grease, oil, paint and tar. Thanks to their sealed packaging, EasyWipes remain fresh. What's more, the packaging is so small that it can easily be stored in a toolbox or van compartment.



- New packaging with a snap-on lid, which helps keep wipes fresh for longer. Less waste!
- The package size has been increased from 50 to 100 wipes – a larger package means more product at an attractive price
- They clean surfaces quickly and effectively.
- Safe to use on hands
- Ideal for quick cleaning after work

Part No.*	Product	Quantity	Size
S010151	EasyWipes	1 box	12 packages

Advanced

Information correct at time of going to press. Not all products are available in all regions. This document has been translated using AI and may contain inaccuracies.

HookTite®



CLEANING COVER FOR CEILING AIR CONDITIONERS

- Ideal for routine maintenance
- Protects walls, carpets and surrounding equipment whilst cleaning
- Perfect for use with Advanced coil cleaners
- Access holes and a drain tube to ensure splash-free cleaning
- Time-saving – no dust sheets and no cleaning up afterwards

Part No.	Product	Qty	Size
S010122	HookTite	5	1000 x 1000mm

TieTite®



CLEANING COVER FOR WALL-MOUNTED INDOOR UNITS

- Ideal for use with high wall air conditioning units
- Protects walls, carpets and surrounding equipment whilst cleaning
- Provides protection to the user

Part No.	Product	Qty	Size
S010424	TieTite 1	Pack of 50 & Bucket	930 x 450mm
S010426	TieTite 2	Pack of 50 & Bucket	1100 x 450mm
S010119	TieTite Size 1	5	930 x 450mm
S010423	TieTite Size 1	Pack of 10	930 x 450mm
S010120	TieTite Size 2	5	1100 x 450mm
S010425	TieTite Size 2	Pack of 10	1100 x 450mm

Mimic®



UNIVERSAL A/C REMOTE CONTROL

- Compatible with most major air conditioner brands
- On screen ambient temperature
- Up to 4 unit codes can be stored: control 4 units at a time without reprogramming
- 1, 5 and 7 day programmable timer for more economical AC operation

Part No.	Product	Qty
S080019GB	Mimic	1

Advanced

Information correct at time of going to press. Not all products are available in all regions. This document has been translated using AI and may contain inaccuracies.



HeatClean RTU

HEAT PUMP CLEANER

Ready to use

Aerosol

Concentrate

Condensate pump safe

ECO FRIENDLY

- Nature-based and 100% biodegradable.
- Made from organic salts derived from natural materials
- Suspends dirt particle in the presence of high concentration of cationic surfactants, cationic esters, and cationic polymers
- Dissolves and removes dirt to extensively improve thermal properties of Heat Pumps
- Easy to use with excellent performance

Code	Product	Qty	Size
S010163R1	HeatCleanRTU	8	1L
S010161R1	HeatClean	4	5L

Advanced

Information correct at time of going to press. Not all products are available in all regions. This document has been translated using AI and may contain inaccuracies.



14 TOOL STORAGE & BAGS

Veto Evo	196-203
Veto Pro Pac	204-210
Veto Norwalk	211-214

Scan here for full range:

ASPEN PUMPS GROUP

Photo credit: @vetpropac_toolbags


VETO PRO PAC
TECH PAC



evo system

Evo – the ultimate wearable tool bag system designed for trade. Simply attach and deploy.

Hands free, fast access to tools, free body movement & weight distribution. Carry only what you need, where you need it. The Evo system™ works using docks, clips and ultra strong magnets. Attach securely MOLLE tool pouches, suspenders, holsters and many attachments. One system. Countless possibilities.

WORK TACTICAL.

Scan For The Full EVO Range







Tech Pac EVO VPP10943

The Tech Pac Evo is a large modular tool backpack. Evo System™ clips attach pouches to the Evo System™ dock, belts, trouser pockets, or magnetically mount to surfaces such as work vans or condensers. Featuring Veto Pro Pac's V-Swap™ interchangeable panels with tool and meter panels included, allowing customisable storage for different jobs.

- 2 Evo System™ docks for attaching pouches with the Evo System™ clip and all Veto Pro Pac belt clips, as well as attaching a tape measure, a pocket level, or attaching an electrical tape strap
- 2 strips of moulded vertical MOLLE for additional clip attachment points
- Rugged, thermoformed front access pocket
- Quick release metal hasp supports load & allows easy access to rear storage bay
- Impact and water-resistant polypropylene base
- Trolley handle pass-through
- Thermoformed cushioned EVA back pad
- Exterior manifold gauge & hose storage pocket
- Stainless steel tape holder clip hook, clip on 8-inch strap for insulating tape clip, interior magnetic screw catcher and 2 x D Rings
- Premium removable backpack straps with extra padding and enhanced materials for increased durability and load capacity
- Extra padding and reinforced materials for enhanced durability, comfort and freedom to move.
- Features Veto Pro Pac's V-Swap™ removable and exchangeable tool and meter panels

Dimensions	483mm H x 393mm W x 280mm D (560 mm with handle up)	**Weight (empty)**	6.3 kg	**Max. Payload**	22.5 kg	**Internal Volume**	23.8 L

evo system
COMPATIBLE POUCHES

Hand tools & long shank tools

VPP10947	MP EVO
VPP10948	MP1 EVO
VPP10949	MP2 EVO
VPP10950	MP3 EVO

Meter & hand tools

VPP10953	MB-S EVO
VPP10954	MB-L EVO
VPP10955	MB-M EVO

Mini meters & hand tools

VPP10951	MPM EVO

Drill holster

VPP10952	DH EVO

V-SWAP
COMPATIBLE PANELS



Front tool AX3573 | Meter AX3574 — **Included**

Laptop AX3575 | Bulk storage AX3597 — **Sold separately**



Evo System™







WORK TACTICAL

Information correct at time of going to press. Not all products are available in all regions. This document has been translated using AI and may contain inaccuracies.

5 YEAR ZERO DOWNTIME WARRANTY



Tech Pac MC EVO VPP10944

A compact tool backpack and the EVO version of the Tech Pac MC. It includes two Evo System™ docks for securely attaching pouches with the Evo System™ clip. The bag also features a large front sleeve pocket for storing items such as a parts box, hoses, or cables, a trolley handle pass-through, and premium removable backpack straps with extra padding and reinforced materials for enhanced durability and comfort.

- 2 Evo System™ docks for attaching pouches with the Evo System™ clip and all Veto Pro Pac belt clips as well as attaching a tape measure, a pocket level, or attaching an electrical tape strap
- 2 strips of moulded vertical MOLLE for additional clip attachment points
- Large front sleeve pocket for storing items such as a parts box, hoses, or cables
- Rugged, thermoformed front access pocket
- Quick release metal hasp supports load & allows easy access to rear storage bay
- Impact and water-resistant polypropylene base
- Trolley handle pass-through
- Thermoformed cushioned EVA back pad
- Stainless steel tape holder clip hook, clip on 8-inch strap for insulating tape clip, interior magnetic screw catcher and 2 x D Rings
- Premium removable backpack straps with extra padding and enhanced materials for increased durability and load capacity
- Extra padding and reinforced materials for enhanced durability, comfort and freedom to move
- Features Veto Pro Pac's V-Swap™ removable and exchangeable tool and meter panels

Dimensions	408mm H x 330mm W x 286mm D	**Weight (empty)**	4.8 kg	**Max. Payload**	15.9 kg	**Internal Volume**	18 L

evo system

COMPATIBLE POUCHES

Hand tools & long shank tools

VPP10947	MP EVO
VPP10948	MP1 EVO
VPP10949	MP2 EVO
VPP10950	MP3 EVO

Meter & hand tools

VPP10953	MB-S EVO
VPP10954	MB-L EVO
VPP10955	MB-M EVO

Mini meters & hand tools

VPP10951	MPM EVO

Drill holster

VPP10952	DH EVO

V-SWAP™

COMPATIBLE PANELS


Front Tool AX3584 — Included

Meter AX3585 — Included


Tablet AX3586 — Sold separately


Bulk storage AX3587 — Sold separately


Hang Up Hook — Sold separately


Padded Trolley Handle Sleeve — Sold separately







WORK TACTICAL

Information correct at time of going to press. Not all products are available in all regions. Please check before ordering. Images may be representative only. Accessories may be sold separately.

5 YEAR ZERO DOWNTIME WARRANTY



Tech-MCT EVO VPP10945

The Tech-MCT EVO is a compact service tool bag and part of the modular Evo System™. It includes two Evo System™ docks for securely attaching pouches with the Evo System™ clip or other items with belt clips, such as pouches, tape measures, pocket levels, or the included electrical tape strap. The bag also features two strips of moulded vertical MOLLE for additional clip attachment points and a large Velcro pocket for storing items such as a parts box, probes, gloves, or other accessories.

- 2 Evo System™ docks for attaching pouches with the Evo System™ clip and all Veto Pro Pac belt clips as well as attaching a tape measure, a pocket level, or attaching an electrical tape strap
- 2 strips of moulded vertical MOLLE for additional clip attachment points
- Large Velcro pocket for storing items such as a parts box, probes, gloves, etc.
- Interior magnetic screw catcher
- Detachable 50" padded shoulder strap
- Rugged, thermoformed front access pocket
- Impact and water-resistant polypropylene base
- Large Velcro pocket for storing parts boxes, probes, gloves etc securely.
- Stainless steel tape holder clip hook, clip on 8-inch strap for insulating tape clip, interior magnetic screw catcher and 2 x D Rings
- Detachable 50" padded shoulder strap
- Extra padding and reinforced materials for enhanced durability, comfort and freedom to move.
- Features Veto Pro Pac's V-Swap™ removable and exchangeable tool and meter panels

Dimensions	310mm W x 268mm D x 355mm H	**Weight (empty)**	3.4 kg	**Max. Payload**	18 kg	**Internal Volume**	14.6 L

evo system
COMPATIBLE POUCHES

Hand tools & long shank tools

VPP10947	MP EVO
VPP10948	MP1 EVO
VPP10949	MP2 EVO
VPP10950	MP3 EVO

Meter & hand tools

VPP10953	MB-S EVO
VPP10955	MB-M EVO

Mini meters & hand tools

VPP10951	MPM EVO

Drill holster

VPP10952	DH EVO

V-SWAP™
COMPATIBLE PANELS


Front Tool AX3602 | Meter AX3603
Included


Tablet AX3604 | Bulk storage AX3605


Large velcro pocket

Sold separately







WORK TACTICAL

Information correct at time of going to press. Not all products are available in all regions. This document has been translated using AI and may contain inaccuracies.

5 YEAR ZERO DOWNTIME WARRANTY



TP-XXL EVO VPP10946

A closable, extra-large tool pouch and the EVO version of the TP-XXL. Including two Evo System™ docks for securely attaching pouches, along with two strips of moulded MOLLE for additional attachment points. Featuring a detachable 50″ padded shoulder strap, this bag also features an padded tablet pocket making it even more versatile.

- 2 Evo System™ docks for attaching pouches with the Evo System™ clip and all Veto Pro Pac belt clips as well as attaching a tape measure, a pocket level, or attaching an electrical tape strap
- 2 strips of moulded vertical MOLLE for additional clip attachment points
- Includes rear tablet pocket
- Detachable 50" padded shoulder strap
- Rugged, thermoformed front access pocket
- Impact and water-resistant polypropylene base
- Stainless steel tape holder clip hook, clip on 8-inch strap for insulating tape clip, interior magnetic screw catcher and 2 x D Rings
- Features Veto Pro Pac's V-Swap™ removable and exchangeable tool and meter panels

Dimensions	380mm H x 293mm W x 228mm D	**Weight (empty)**	2.9 kg	**Max. Payload**	13.5 kg	**Internal Volume**	9.3 L

evo system
COMPATIBLE POUCHES

Hand tools & long shank tools

VPP10947	MP EVO
VPP10948	MP1 EVO
VPP10949	MP2 EVO
VPP10950	MP3 EVO

Meter & hand tools

VPP10953	MB-S EVO
VPP10954	MB-L EVO
VPP10955	MB-M EVO

Mini meters & hand tools

VPP10951	MPM EVO

Drill holster

VPP10952	DH EVO

V-SWAP™
COMPATIBLE PANELS



Front Tool AX3640

2 & 4 Bit pockets VPP10362

Rear Tool VPP10657

Included



Evo System™



Removable backpack straps and sling strap

Sold separately







WORK TACTICAL

Information correct at time of going to press. Not all products are available in all regions. This document has been translated using AI and may contain inaccuracies.

5 YEAR ZERO DOWNTIME WARRANTY



MPM EVO VPP10951

The MPM EVO is a medium-sized tool pouch designed to accommodate a multi-meter and store a minimal amount of tools. It uses the Evo System™ clip to attach to bags with the Evo System™ dock, belts, trouser pockets, or magnetically mount to surfaces such as work vans or condensers. Ideal for electrical testing the MPM EVO features a large main pocket in the centre designed for storing a multi-meter.

- Features the Evo System™ clip for attaching the pouch to a larger bag with the Evo System™ dock
- 11 vertical pockets
- 2 Through pockets for long shanked tools
- One centre pocket sized for storing a multi meter
- Clip on 8-inch strap for insulating tape clip and 2 x D Rings
- Leather & synthetic fibre construction
- Low-profile carrying handle
- Flush mounted stainless-steel clip providing a durable connection point for hanging tools

Dimensions	215mm H x 178mm W x 128mm D	**Weight (empty)**	0.5 kg	**Max. Payload**	3.5 kg







evo system
COMPATIBLE BAGS

Back Packs
VPP10943 Tech-Pac EVO
VPP10944 Tech-Pac MC EVO

Compact Service Tool Bag
VPP10945 Tech-Pac MCT EVO

Large Carry Bag
VPP10946 Tech-Pac TP XXL





WORK TACTICAL

Information correct at time of going to press. Not all products are available in all regions. This document has been translated using AI and may contain inaccuracies.

5 YEAR ZERO DOWNTIME WARRANTY



Evo System™
CLIP MAGNET

DH EVO VPP10952

The DH EVO is compact-sized drill holster designed to be low profile and store most compact sized drills. Utilizing the Evo System™ clip for attaching the pouch to a larger bag with an Evo System™ dock, a tool or waist belt, trouser pocket, or magnetically mount to surfaces inside a work van or equipment requiring service. The DH EVO features 4 drill bit pockets, a stainless-steel tape measure clip, and an optional lanyard can be fastened across the drill for additional security. The lanyard can be removed or pushed down if not needed. The DH EVO is ideal for tradesmen looking for quick access and secure storage to a drill from a belt or tool bag.

- Features the Evo System™ clip for attaching the pouch to a larger bag with the Evo System™ dock
- 3 External pockets for 2-4" bits and short extensions and nut drivers
- Low profile carrying handle for easy transport
- Stainless steel tape measure clip
- Removable low profile safety lanyard for added security

Dimensions	185mm H x 108mm W x 75mm D	**Weight (empty)**	0.3 kg	**Max. Payload**	2.5 kg







evo system
COMPATIBLE BAGS

Back Packs
VPP10943 Tech-Pac EVO
VPP10944 Tech-Pac MC EVO

Compact Service Tool Bag
VPP10945 Tech-Pac MCT EVO

Large Carry Bag
VPP10946 Tech-Pac TP XXL



Evo System™

WORK TACTICAL

Information correct at time of going to press. Not all products are available in all regions. This document has been translated using AI and may contain inaccuracies.



MB EVO Range

The MB EVO range are compact multi meter bags in three sizes. All using the Evo System™ clip to attach bags in the Evo System™ dock, belts, trouser pockets, or magnetically mount to surfaces such as work vans or condensers. Features include Velcro gussets for 180° access, two adjustable elastic straps for securing the meter, five pockets, an internal elastic band for leads, external MOLLE and a low-profile handle.

- Features the Evo System™ clip for attaching the pouch to a larger bag with the Evo System™ dock.
- Sized to accommodate multimeter dimensions up to 305mm x 108mm x 58mm
- Low profile carrying handle for easy transport
- 2 repositionable or removable elastic straps for securing meter for unobstructive use while pouch is open
- Internal elastic strap for storing leads, with a total of 5 internal and external pockets for additional storage. Features external MOLLE for attaching additional items with a belt clip
- Stainless steel tape holder clip hook, clip on 8-inch strap for insulating tape clip, interior magnetic screw catcher and 2 x D Rings
- Attach gussets to limit opening to retain loose contents, or detach enabling pouch to open a full 180°

Part No / Description	Dimensions HxWxD	Fits Meter Size	Weight (empty)	Max. Payload
VPP10953 MB-S	228mm x 90mm x 128mm	216mm x 108mm x 58mm	0.6 kg	3.5kg
VPP10955 is MB-M EVO	268mm x 128mm x 90mm	254mm x 108mm x 58mm		
VPP10954 is MB-L EVO (**Not compatible with VPP10945 Tech Pac MCT)	318mm x 128mm x 75mm	305mm x 108mm x 45mm		

evo system
COMPATIBLE BAGS

Back Packs
VPP10943 Tech-Pac EVO
VPP10944 Tech-Pac MC EVO

Compact Service Tool Bag
VPP10945 Tech-Pac MCT EVO**

Large Carry Bag
VPP10946 Tech-Pac TP XXL



Evo System™







WORK TACTICAL

Information correct at time of going to press. Not all products are available in all regions. This document has been translated using AI and may contain inaccuracies.

5 YEAR ZERO DOWNTIME WARRANTY



MP EVO Range

The MP EVO Range is a compact tool bag in four sizes. It uses the Evo System™ clip to attach bags to the Evo System™ dock, belts, trouser pockets, or magnetically mount to surfaces such as work vans or condensers. Ideal for a balanced load they feature main pockets sized for hand tools. Internal through-pockets accommodate long shank or handled tools, and pen-sized pockets complete the sides of the pouch.

- Features the Evo System™ clip for attaching the pouch to a larger bag with the Evo System™ dock
- 2 Through pockets for long shanked tools
- Low profile carrying handle for easy transport
- Internal elastic strap for storing leads

Part No / Description	Pocket count	Dimensions HxWxD	Weight (empty)	Max. Payload*
VPP10947 MP EVO	4	190mm x 128mm x 75mm	0.3 kg	2.5kg
VPP10948 MP1 EVO	9	215mm x 140mm x 103mm	0.4 kg	
VPP10949 MP2 EVO	11	215mm x 153mm x 115mm	0.5 kg	3.45kg
VPP10950 MP3 EVO	14	215mm x 178mm x 128mm		







evo system
COMPATIBLE BAGS

Back Packs
VPP10943 Tech-Pac EVO
VPP10944 Tech-Pac MC EVO

Compact Service Tool Bag
VPP10945 Tech-Pac MCT EVO

Large Carry Bag
VPP10946 Tech-Pac TP XXL





WORK TACTICAL

Information correct at time of going to press. Not all products are available in all regions. This document has been translated using AI and may contain inaccuracies.



Tech-Pac

BACKPACK TOOL BAG

Veto Pro Pac's Tech Pac is Veto's first backpack tool bag designed specifically for professional service and commissioning engineers carrying tools, laptops & service checkers. Ideal for the long walks on large sites and inner city calls outs.

- Adjustable padded shoulder straps
- Padded EVA thermoformed, ergonomic back padding
- Pocket for small tablet or laptop/multi purpose
- Internally stored aluminium hook to hang bag
- 46 interior & exterior pockets
- 5 year limited warranty

Description	Part No.
Tech Pac	AX3501

Model specific specifications	
Size mm – w/d/h	305x230x330 (400 with handle)
Weight (empty)	2kg
Storage/pockets	Vertical Tool Pockets: 46 interior and exterior tool pockets of various sizes. 2 Storage Bays – 4 Storage Platforms
Max. Payload	23kg
Internal volume	25L
D-Rings	4 large and 5 small
S/S Tape clip	✓
Plus	Quick release metal hasp

Rugged materials & construction

Waterproof base: 3mm Injection molded Polypropylene. **Weatherproof body fabric:** 950 and 1250 PVC Impregnated denier fabric. **Weatherproof tool pocket fabric:** 1800 PVC Impregnated denier fabric. **Quick release metal hasp:** Easy access to rear storage bay and creates positive shoulder strap load connection. **Handle:** Injection molded nylon plastic with over-molded rubber grip. **YKK® Zips:** Double stitched, heavy duty plastic coil zips with oversized zip tabs. **Press studs:** 6 zinc, marine grade. **D-Rings:** Powder coated steel. **Rivets:** 38 zinc, gun metal/marine grade rivets. **Stitching:** Industrial strength double nylon stitching.

Information correct at time of going to press. Not all products are available in all regions. This document has been translated using AI and may contain inaccuracies.



VETO PRO PAC®
TOOL BAGS THAT WORK

5 YEAR ZERO DOWNTIME WARRANTY

Tech Pac Wheeler Blackout

WHEELED TOOLBAG

The Tech Pac Wheeler Blackout is a rolling version of the best-selling Tech Pac Blackout backpack tool bag with an all-black colour scheme. This wheeled backpack includes new premium padded backpack straps that are completely removable. This makes stowing the backpack straps easier and allows you to choose whether the bag can function as a backpack or not. The Tech Pac Wheeler Blackout also features the V-Swap™ system. Includes a tool panel and a meter panel. Other panels sold separately.

- Optional & stowable backpack shoulder harness
- Premium removable backpack straps with extra padding and enhanced materials for increased durability and load capacity
- Thermoformed cushioned EVA back pad

Description	Part No.
Tech Pac Wheeler Tool Bag	AX3709

Model specific specifications	
Size mm – w/d/h	280x410x610
Weight (empty)	7.25kg
Storage/pockets	48 Interior and exterior tool pockets
Max. Payload	28kg
Internal volume	27L
Plus	8” Electrical Tape Strap
V-SWAP	V-swap™ removable tool pocket panel system with alternate tool panels available & sold separately

Rugged materials & construction

Waterproof base: 3mm Injection molded Polypropylene. **Weatherproof body fabric:** 950 and 1250 PVC Impregnated denier fabric. **Weatherproof tool pocket fabric:** 1800 PVC Impregnated denier fabric. **Quick release metal hasp:** Easy access to rear storage bay and creates positive shoulder strap load connection. **Handle:** Injection molded nylon plastic with over-molded rubber grip. **YKK® Zips:** Double stitched, heavy duty plastic coil zips with oversized zip tabs. **Press studs:** 6 zinc, marine grade. **D-Rings:** Powder coated steel. **Rivets:** Gun metal/marine grade rivets. **Stitching:** Industrial strength double nylon stitching.

Information correct at time of going to press. Not all products are available in all regions. This document has been translated using AI and may contain inaccuracies.



Tech-MCT

COMPACT / TALL TOOL BAG

Compact, yet fully featured service, repair or installation tool organiser that features everything you have come to expect from Veto Pro Pac's patented center panel, heavy duty construction and stabilizing injection molded waterproof base that keeps tools dry, even in the nastiest of conditions.

- Vertical Tool Pockets: 20 interior and exterior
- D-Rings: 2 large and 5 small
- Meters and compact cordless drill/driver compartment

Description	Part No.
Tech MCT Open Tool Bag	AX3513

Model specific specifications	
Size mm – w/d/h	305x215x355
Weight (empty)	2.25kg
Storage/pockets	44 vertical interior and exterior. 2 Storage Bays- Hand Tools on one side; Meter and Drill Storage on the other side; 2 Neoprene Pockets on Meter Side
Max. Payload	14kg
Internal volume	13L
D-Rings	2- 2" and 5- 1"
S/S Tape clip	✓

Rugged materials & construction

Waterproof base: 3mm Injection molded Polypropylene. **Weatherproof body fabric:** 950 and 1250 PVC Impregnated denier fabric. **Weatherproof tool pocket fabric:** 1800 PVC Impregnated denier fabric. **Quick release metal hasp:** Easy access to rear storage bay and creates positive shoulder strap load connection. **Handle:** Injection molded nylon plastic with over-molded rubber grip. **YKK® Zips:** Double stitched, heavy duty plastic coil zips with oversized zip tabs. **Press studs:** 6 zinc, marine grade. **D-Rings:** Powder coated steel. **Rivets:** Gun metal/marine grade rivets. **Stitching:** Industrial strength double nylon stitching.

Information correct at time of going to press. Not all products are available in all regions. This document has been translated using AI and may contain inaccuracies.



TP-XXL

EXTRA LARGE TOOL POUCH

A closable extra-large sized tool pouch designed with integral side mounted padded meter pockets. Each zippered meter pocket will securely fit meters up to 260mm x 90mm x 50mm. The TP-XXL can be customized to hold a variety of tools, meters, fasteners, small tablet computer (rear pocket can accommodate tablet up to 9″ x 11″), and various other gear.

- Includes rear tablet pocket & 2 Padded Meter Pockets
- “Hang-Up” Hook- Accessible While Open & Closed
- Over-Molded Rubber Grip
- Padded Shoulder Strap

Description	Part No.
TP-XXL Tool Pouch	AX3579

Model specific specifications	
Size mm – w/d/h	305x215x80 (560 with handle up)
Weight (empty)	14kg
Storage/pockets	46 total exterior and interior pockets; V-Swap™ Removable Tool Pocket Panel System; Includes rear tablet pocket & 2 Padded Meter Pockets
Max. Payload	14kg
Internal volume	12L
D-Rings	2- 2” and 5- 1”
S/S Tape clip	✓

Rugged materials & construction

Waterproof base: 3mm Injection molded Polypropylene. **Weatherproof body fabric:** 950 and 1250 PVC Impregnated denier fabric. **Weatherproof tool pocket fabric:** 1800 PVC Impregnated denier fabric. **Quick release metal hasp:** Easy access to rear storage bay and creates positive shoulder strap load connection. **Handle:** Injection molded nylon plastic with over-molded rubber grip. **YKK® Zips:** Double stitched, heavy duty plastic coil zips with oversized zip tabs. **Press studs:** 6 zinc, marine grade. **D-Rings:** Powder coated steel. **Rivets:** Gun metal/marine grade rivets. **Stitching:** Industrial strength double nylon stitching.

Information correct at time of going to press. Not all products are available in all regions. This document has been translated using AI and may contain inaccuracies.



Tech-Pac Blackout

BACKPACK TOOL BAG

The Tech Pac Blackout is a blacked-out tool backpack for tool storage based on our Tech Pac but with Veto Pro Pac's V-Swap™ system that comes with front and back removable tool and meter pocket panels which are also exchangeable.

Note: This bag comes with the tool and meter panel. You do not have to select any panels for the bag to come with the tool and meter panels though you may purchase additional panels to offer a variety of configurations. Visit website for further details.

Description	Part No.
Tech-Pac Blackout Tool Bag	AX3561

Model specific specifications	
Size mm – w/d/h	330x250x495 (560 with handle up)
Weight (empty)	5.5kg
Storage/pockets	Vertical Tool Pockets: 46 interior and exterior tool pockets of various sizes; Upper Pockets (Front Side) Designed For Extra Tool Capacity; Swap-Out Tool Panels- Front and Back Tool Panels are removable and exchangeable; Laptop Panel Available as an accessory (must be purchased separately) 2 Storage Bays- 4 Storage Platforms; Manifold Gauge and Hose Storage Pocket
Max. Payload	23kg
Internal volume	25L
D-Rings	4 large and 5 small
S/S Tape clip	✓
Plus	8" Electrical Tape Strap

Rugged materials & construction

Waterproof base: 3mm Injection molded Polypropylene. **Weatherproof body fabric:** 950 and 1250 PVC Impregnated denier fabric. **Weatherproof tool pocket fabric:** 1800 PVC Impregnated denier fabric. **Quick release metal hasp:** Easy access to rear storage bay and creates positive shoulder strap load connection. **Handle:** Injection molded nylon plastic with over-molded rubber grip. **YKK® Zips:** Double stitched, heavy duty plastic coil zips with oversized zip tabs. **Press studs:** 6 zinc, marine grade. **D-Rings:** Powder coated steel. **Rivets:** Gun metal/marine grade rivets. **Stitching:** Industrial strength double nylon stitching.

Information correct at time of going to press. Not all products are available in all regions. This document has been translated using AI and may contain inaccuracies.



TR-LC

LARGE TOOL ROLL

The TR-LC is a highly functional, large modular tool roll designed for job sites and roadside repairs. It features a mountable design with a hanging hook to keep it off the ground and out of the mud. This large tool roll is easily carried with an ergonomic grip handle and a shoulder strap when rolled up, and two secondary handles for quick transport when unrolled.

- The TR-LC includes five removable storage pouches and rolls: three multi-coloured large bulk storage pouches (“RP-LCs“) designed to contain items while hanging; a wrench roll (“WR-LC“) for a full wrench set, and a socket roll (“SR-LC“) for a full socket set. Both the WR-LC and SR-LC also function as standalone rolls with external zippered pockets and carrying handles.
- The RP-LCs, WR-LC, and SR-LC utilise heavy duty Velcro to ensure a secure attachment and easy detachment on the inside of the TR-LC so that you can grab them and go as you need.

Description	Part No.
TR-LC Large Tool Roll	AX3710

Model specific specifications

Size mm – w/d/h	Rolled: 68x180x230 Unrolled: 368xN/A x737
Weight (empty)	2kg
Storage/pockets	35 Interior and exterior tool pockets
Max. Payload	15.9kg
Internal volume	n/a

Rugged materials & construction

Highly durable 600D polyester external construction; Water-resistant and wipeable internal construction; Over-molded rubber grip handle & Padded shoulder strap; “Hang-up” hook - accessible while open; External zippered pocket; Adjustable dual-buckle fastening system; 2 Secondary carrying handles for quick transport while unrolled; Internal zippered transparent pocket. **Storage:** 3 Removable multi-colored semi-transparent bulk storage zippered Tool Roll Pouches (RP-LCs) that can provide secure access to contents while roll is hung up; 1 Removable Socket Storage Roll (SR-LC) featuring a carrying handle, 1 external zippered pocket, adjustable dual-buckle fastening system, 30 socket storage loops and 10 socket wrench and extension storage loops; 1 Removable Wrench Storage Roll (WR-LC) featuring a carrying handle; 1 external zippered pocket, adjustable dual-buckle fastening system; and 10 wrench storage pockets and elastic loops.

Information correct at time of going to press. Not all products are available in all regions. This document has been translated using AI and may contain inaccuracies.



Hose Hauler Blackout

SERVICE TECH HOSE BAG

The Hose Hauler Blackout is a “blacked-out” version of the existing Hose Hauler with a few added features. It includes a “suitcase-like” expansion feature that increases internal capacity, allowing you to fit more hoses, store a refrigerant scale with your hoses and gear, or hold up to 100 feet of extension cord. Inside, a removable security strap keeps hoses or extension cords fastened and prevents them from unraveling.

The bag also features three removable zippered pouches—two corner pouches and one centre pouch—for storing tools and equipment. The flap includes a dual-zippered 2-in-1 pocket that opens from the top or bottom. On the outside, there is an added hanging hook for mounting the bag and a shoulder strap for easy transport. This is the ultimate bag for hoses, extension cords, and recovery or evacuation kits.

- Water/Oil Resistant Tarpaulin Interior for easy clean up
- “Hang-up” hook - accessible while open and closed
- Expansion feature to increase internal capacity
- Removable Internal Strap to secure hoses and cords and prevent unraveling
- Shoulder strap

Description	Part No.
Tech Pac Hose Hauler Blackout	AX3707

Model specific specifications	
Size mm – w/d/h	430x130x430
Weight (empty)	1.8kg
Storage/pockets	Up to 6 pockets
Max. Payload	7kg
Internal volume	11.2L
D-Rings	2 exterior
Molle Straps	2 exterior

Rugged materials & construction

Water/Oil Resistant Tarpaulin Interior for easy clean up; Rugged bottom to prevent tears and scratches; YKK® Zippers

Information correct at time of going to press. Not all products are available in all regions. This document has been translated using AI and may contain inaccuracies.

NORWALK 20L BACKPACK

Part No. VT020002



TOP FEATURES:

- Recycled water resistant 600D waxed polyester
- Simple and versatile pocket layout with Hypalon touchpoints for easy access
- Separate padded laptop compartment with tablet sleeve; can store up to 17" laptops (depending on manufacturer)
- 2 dual-purpose magnetic side pockets with zip closure, Fitting up to 40 oz water bottles and small EDC items; compatible with the Stanley Quencher, Yeti Rambler, and more
- RFID-blocking front pockets
- Low profile key clip
- Breathable micro-mesh back padding
- Trolley handle pass-through



RFID-blocking front pocket with low profile key clip



Simple and versatile pocket layout

SPECIFICATIONS:

- DIM: 18"H x 12"W x 7"D (46cm H x 30.5cm W x 18cm D)
- WT: 4 LBS (1.8 KG)
- VOL: 20L
- MAX PAYLOAD: 25 LBS (11.30 KG)



Padded laptop compartment with tablet sleeve



Innovative magnetic side pockets fit a wide range of water bottles



Information correct at time of going to press. Not all products are available in all regions. This document has been translated using AI and may contain inaccuracies.

NORWALK+ 40L DUFFEL

Part No. VT020011



TOP FEATURES:

- Recycled water resistant 600D waxed polyester
- Enhanced self-standing structure for easy access and stability
- Highly durable, impact and water-resistant thermoformed base
- Innovative, deployable zippered shoe compartment
- Wipeable, water resistant compartment for toiletry items or dirty clothes
- Reinforced custom D-rings for attaching shoulder strap and accessories
- Magnetic trolley handle pass-through
- Secondary side grab handles
- Padded adjustable shoulder strap with premium Duraflex™ clips

SPECIFICATIONS:

- DIM: 12.5"H x 21"W x 10.5"D (32cm H x 53cm W x 27cm D)
- WT: 4 LBS (1.8 KG)
- VOL: 40L
- MAX PAYLOAD: 20 LBS (22.7 KG)



Wipeable, water resistant compartment



Deployable zippered shoe compartment





Magnetic trolley handle pass-through



Padded adjustable shoulder strap with Duraflex clips



Information correct at time of going to press. Not all products are available in all regions. This document has been translated using AI and may contain inaccuracies.

NORWALK TECH CASE

Part No. VT020003



TOP FEATURES:

- Recycled water resistant 600D waxed polyester
- Clamshell opening for easy access
- 4 elastic charger cord loops
- Gusseted pocket optimized for storing a large power bank
- 3 pen/pencil/stylus loops
- Zippered compartment that's great for storing charging blocks, large cords, etc.
- 2 stretch mesh pockets

SPECIFICATIONS:

- DIM: 5.75"H x 9"W x 3.5"D (20cm H x 30.5cm W x 9cm D)
- WT: .75 LBS (.34 KG)
- VOL: 3L
- MAX PAYLOAD: 6 LBS (2.7 KG)



Removable tech pouch with 2 zippered compartments



Gusseted pocket for a power bank with elastic loops for cable storage



Low profile grip handle



VETO double-gated carabiner included



Zippered compartment for charging blocks, large cords, earbuds, etc.

Information correct at time of going to press. Not all products are available in all regions. This document has been translated using AI and may contain inaccuracies.

NORWALK+ TOILETRY CASE

Part No. VT020007



TOP FEATURES:

- Recycled water resistant 600D waxed polyester
- Impact and water-resistant thermoformed base to protect against wet shower walls and countertops
- Clamshell opening for easy access
- Removable hanging strap with reinforced snap and gated g-hook
- Front external zippered pocket with a secondary attachment point for the hanging strap
- Top zippered compartment with wipeable translucent panel

SPECIFICATIONS:

- DIM: 8"H x 12"W x 3.5"D (20cm H x 30.5cm W x 9cm D)
- WT: 1 LBS (.5 KG)
- VOL: 5L
- MAX PAYLOAD: 10 LBS (4.5 KG)
- MAX PAYLOAD: 6 LBS (2.7 KG)



Impact and water-resistant thermoformed base



Wipeable, translucent compartment for small accessroies



Removable wipeable and translucent zippered pouch



Wipeable, translucent bulk storage compartment for large items



Information correct at time of going to press. Not all products are available in all regions. This document has been translated using AI and may contain inaccuracies.

15 LIGHTING & TORCHES

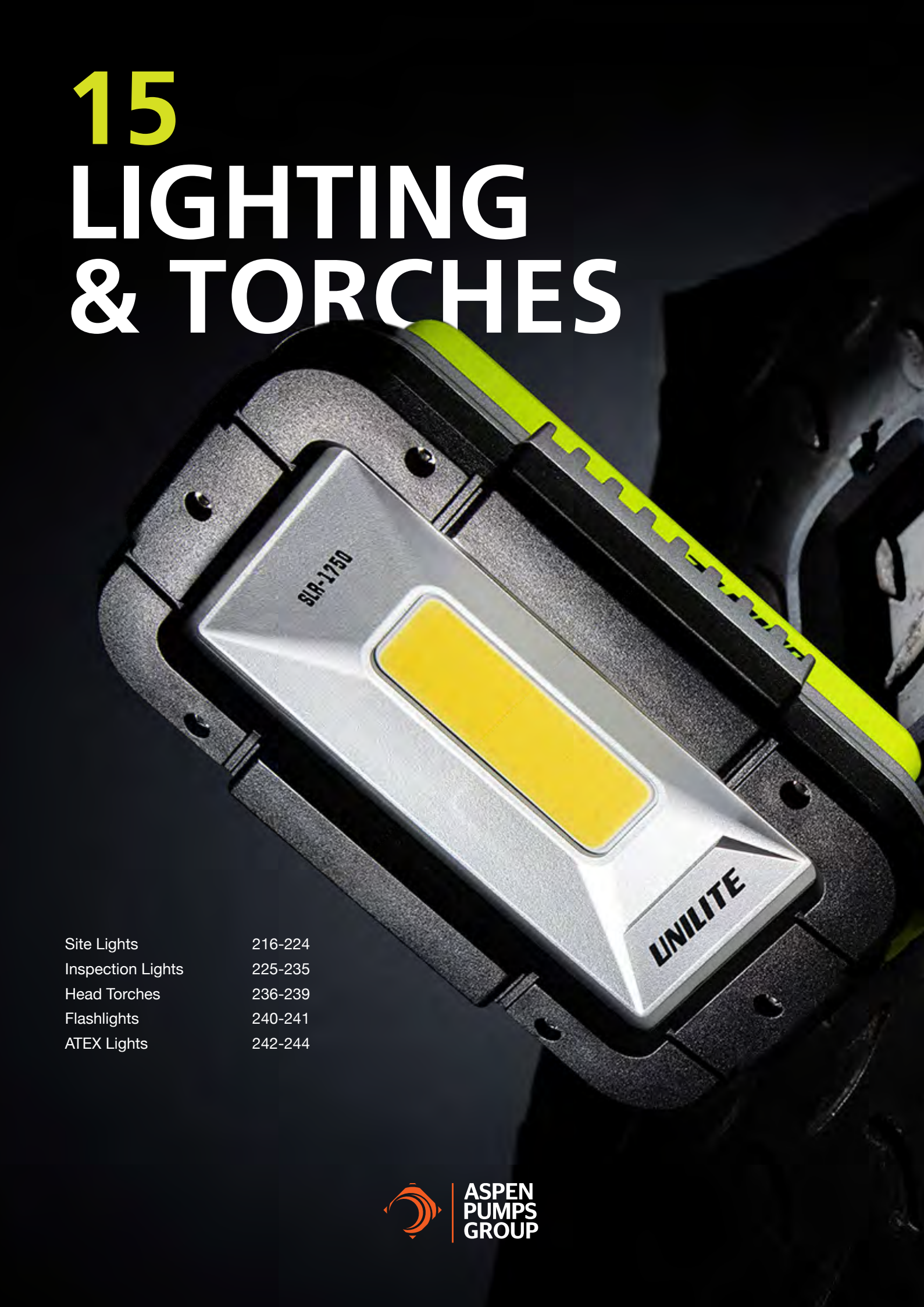

Site Lights	216-224
Inspection Lights	225-235
Head Torches	236-239
Flashlights	240-241
ATEX Lights	242-244

ASPEN PUMPS GROUP











MTB-5300 | MULTI BATTERY HYBRID WORK LIGHT

- 5300 lumen 50W 6500K COB LED
- Dual Power - rechargeable & mains powered
- Takes up to 20V 6.0Ah batteries from Milwaukee, De Walt, Makita & Metabo - 4 adapters included
- Secure battery compartment cover (note: larger 6.0Ah batteries may need to be used without cover)
- Super tough heavy duty nylon construction
- Easy carry rubber grip handle
- Rotating stand with holes for attaching tripod/magnet
- 4 x dim settings: 650 / 1350 / 2700 / 5300 lumen
- Memory Switch - remember last mode used
- Safety automatic switch-over from mains to battery in the event of power failure
- 2A USB Powerbank - works with any battery Installed
- 4 x Battery level & charging indicators
- Comes with 5 metre heavy duty 24V-2.7A H05RN-F charger/power lead (includes UK, EU, US & AU plugs)
- Unilite 14.8V 5.2Ah battery available to purchase separately (NOTE: Only Unilite battery can be charged via the lamp)

BATTERY	Not included, bare tool
WEIGHT	1250g
DIMENSIONS	W 238 x H 257 x D 181mm

NOTE: runtimes based on Unilite 5.2Ah battery

UNILITE

LUMEN 5300LM | **RUNTIME** approx 2.5-16H | **BEAM** 95M | **IP RATING** IP65/IK07

Information correct at time of going to press. Not all products are available in all regions. This document has been translated using AI and may contain inaccuracies.







MTB-10000 | MULTI BATTERY 360 SITE LIGHT

- Ultra bright 10000 lumen 6500K SMD LEDs
- Multiple colour temperatures - CCT: 2700k / 3500k / 4500k / 5500k / 6500k
- Takes up to 20V 6.0Ah batteries from Milwaukee, De Walt, Makita & Metabo - 4 adapters included
- Secure battery compartment cover (note: larger 5.5Ah-6.0Ah batteries may need to be used without cover)
- Super tough heavy duty nylon & polycarbonate construction
- Milky diffuser lens for even light dispersion
- Easy carry rubber grip handle
- Concealed fold-out ultra tough steel hanging hook in base
- 2 screw holes in base for attaching magnets
- IP65 Dust & water resistant
- Heavy duty IK08 Shock proof
- Smart Memory Switch - remember last mode used
- 5 x Battery level & charging indicators
- Unilite 14.8V 5.2Ah battery available to purchase separately

BATTERY	Not included, bare tool
WEIGHT	3650g
DIMENSIONS	W 278 x H 256 x D 333mm

NOTE: runtime is based on the Unilite 14.8V 5.2Ah battery. Other batteries will vary.

UNILITE

LUMEN 10000LM | **RUNTIME** approx 1-10H | **BEAM** 89M | **IP RATING** IP65/IK08

Information correct at time of going to press. Not all products are available in all regions. This document has been translated using AI and may contain inaccuracies.





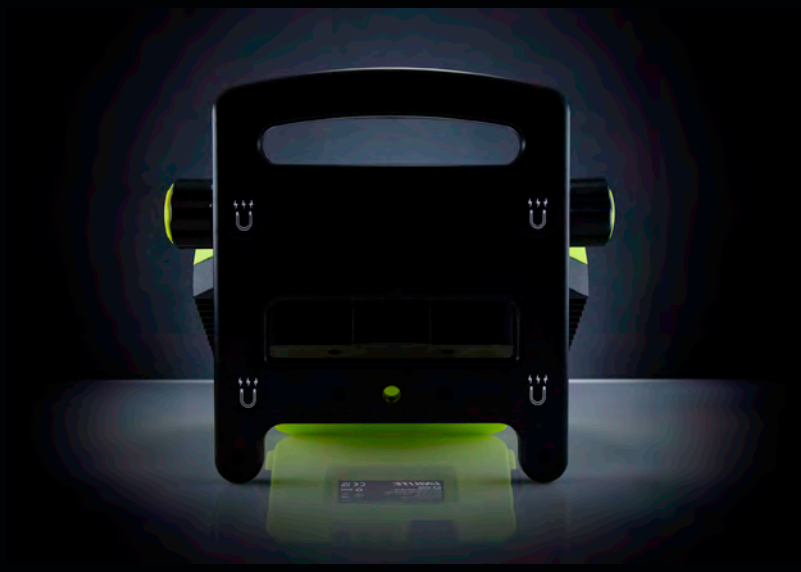

SLR-5500 | RECHARGEABLE WORK LIGHT

- 5500 lumen 50W white SMD LEDs, 6500k
- High power 7.4v 7500mAh Li-ion battery
- Removable battery with powerful 2A USB power bank
- With battery level and charging indicators
- Tough aluminium & polycarbonate construction
- Glow-in-the-Dark strip around reflector for extra visibility
- Built-in aluminium heat sink
- Anti-slip rubber grip handle
- Adjustable head to change light angle
- Acrylic LED diffuser for even light dispersion
- Super strong magnetic base
- Mains 12V 2A multi-country charger/power lead included (inc UK, EU, US & AU adaptors)
- 4-5 hours charge time

BATTERY	7.4v 7500mAh Li-ion Battery Pack
WEIGHT	2200g
DIMENSIONS	215 x 192 x 285mm

LUMEN 5500LM | **RUNTIME** 3-6H | **BEAM** 54M | **IP RATING** IP54

Information correct at time of going to press. Not all products are available in all regions. This document has been translated using AI and may contain inaccuracies.







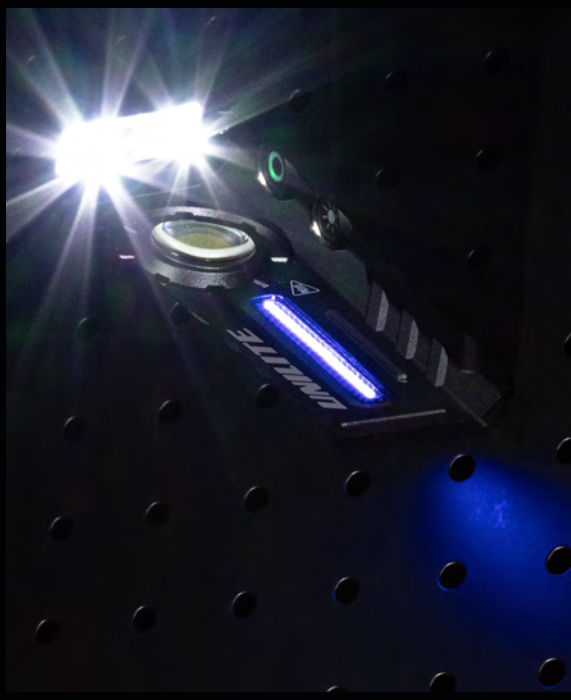

PL-1800 | SLIM ALUMINIUM POCKET LIGHT WITH RGB & UV LEDs

- Super bright 1800 Lumen 6500k white flashlight
- Powerful 1200 Lumen 6000k white Floodlight COB LED
- 365nm UV LED (900mW) flashlight perfect for leak detection
- Red/Green/Blue LED strip for night vision/map reading/ signalling with red flashing mode for emergencies
- Hand-held pocket size constructed from super tough air-craft grade aluminium
- Strong magnetic base & rear pocket clip
- Glow-in-the-dark ring around COB LED
- Dual switches for easy operation
- Press & hold smooth dimming on white modes to reduce brightness further for even longer runtimes
- 30cm 5V-1A USB-C-to-USB-C cable included - quick 3.5hr charge time
- Useful battery level indicators under switches
- RGB strip doubles as easy to see charging indicator

BATTERY	3.7v 2000mAh Li-polymer
WEIGHT	176g
DIMENSIONS	H 120 x W 45 x D 21.88mm

*1800 lumen Turbo lasts 30 seconds then brightness drops for safety and heat reasons.

UNILITE

LUMEN 1800LM* | **RUNTIME** 1.5–6H | **BEAM** 165M | **IP RATING** IPX6

Information correct at time of going to press. Not all products are available in all regions. This document has been translated using AI and may contain inaccuracies.



SP-950 | COMPACT BLUETOOTH SPEAKER WORK LIGHT

- Powerful 950 lumen white COB LED, 6500k
- With 620nm red static & red flashing modes
- High quality built-in 5W powerful Bluetooth speaker
- With 150 lumen 6500k white SMD LED top torch
- Glow-in-the-dark strip around COB LED
- Super tough copolymer and aluminium construction
- 180˚ rotating handle/stand with carabiner snap hook
- Strong magnets within the stand
- Powerful 'LG' 3.7V 5000mAh 21700 Li-ion battery
- 4 x Battery level & charging indicators
- Fast 5V-2A USB-C charging - approx 3 hour charge time
- High quality USB-C cable included
- Battery can easily be removed so a convenient spare can be kept at hand
- 21700 battery has its own bi-directional USB-C port so is easily charged out of the lamp and also used as a 1A powerbank

BATTERY	1 x 3.7V 21700 5000mAh Li-ion Battery
WEIGHT	320g
DIMENSIONS	folded L 122.5 x W 50 x H 65mm extended L 219 x W 50.5 x H 64.5 mm

Please Note: Runtime will vary when using the speaker at the same time as the light

UNILITE

LUMEN 950LM | **RUNTIME** 3.5-50H | **BEAM** 48M | **IP RATING** IPX5

Information correct at time of going to press. Not all products are available in all regions. This document has been translated using AI and may contain inaccuracies.







IL-1600 | HEAVY DUTY FOLDING INSPECTION LIGHT WITH UV

- Super bright 1600 lumen white COB LED, 6500k
- UV LED - 365nm SMD LED (630mW power) - perfect for HVAC & Auto
- Additional top flashlight - 150 lumen SMD LED, 6500k
- Hand-held folding size made from super tough aluminium & nylon construction
- 180˚ Vertical folding and 270˚ twist rotating head
- Super strong magnetic base
- IP65 dust & water resistant / IK07 shock resistant - 2m drop resistant
- UV LED has safety shut off after 5 mins to avoid dangerous exposure
- 3 x Battery level & charging indicators
- Low battery 3x warning flash - reminds when charging is needed
- Fast 5V-2A USB-C charging - 3 hour charge time via port in the lamp body
- 1m High quality USB-C charging cable included
- Battery is easily removed and replaced by unscrewing the base cap
- Powerful 'LG' 5000mAh 21700 li-ion battery with bi-directional USB-C port – allows quicker direct charging time and can be used as a 1A powerbank output to charge other devices

BATTERY	1 x 3.7V 21700 5000mAh Li-ion Battery
WEIGHT	337g (with battery)
DIMENSIONS	folded 187 x 42 x 30 mm extended 349 x 30 x 30 mm

UNILITE

LUMEN 1600LM | **RUNTIME** 3-16H | **BEAM** 49M | **IP RATING** IP65 / IK07

Information correct at time of going to press. Not all products are available in all regions. This document has been translated using AI and may contain inaccuracies.









HX-1080 | HEAVY DUTY HEXAGON WORK LIGHT

- 1080 Lumen 10W white COB LED, 6500k
- Ultra tough heavy duty nylon, aluminium & TPE over-moulded housing
- Fold-out 360-degree swivel finger loop for easy holding
- Extra strong magnetic 120-degree fold-out stand
- Convenient press & hold smooth dimming function
- IK07 super tough construction
- IP65 dust & water resistant
- High quality 3.7v 2600mah Li-ion battery
- Over-charge and over-discharge protection
- 3 Colour battery level indicator
- Green flash-to-green charging indicator
- Low battery warning 3x flash - reminds to charge
- Supports 'PD' Power Delivery fast charging
- Fast 2A USB-C charging - 4 hour charge time
- 1m High quality USB-C cable included

BATTERY	3.7v 2600mAh Li-ion
WEIGHT	220g
DIMENSIONS	106.3 x 93.7 x 40.5mm

UNILITE

LUMEN 1080LM | **RUNTIME** 2.5-8H | **BEAM** 44M | **IP RATING** IP65/IK07

Information correct at time of going to press. Not all products are available in all regions. This document has been translated using AI and may contain inaccuracies.









SPL-350 | SPIRIT LEVEL WITH WORKLIGHT

- 350 Lumen LED spirit level worklight
- Light-up spirit level vial & red laser pointer
- Tough ABS & aluminium construction
- Glow-in-the-dark strip around the LED
- Strong rear & side magnets
- Strong holster with belt clip
- Smart Memory - remembers last mode used
- IPX4 water resistant
- High quality 3.7V 800mAh Li-ion battery
- Battery level & charging indicator
- Low battery warning flash, reminds to charge
- Fast 2A USB-C charging - 1.5 hr charge time
- 1m high quality USB-C charging cable included

BATTERY	3.7V 800mAh Li-ion
WEIGHT	177g
DIMENSIONS	H 55 x W 90 x D 25mm

LUMEN 350LM | **RUNTIME** 1-25H | **BEAM** 23M | **IP RATING** IPX4

Information correct at time of going to press. Not all products are available in all regions. This document has been translated using AI and may contain inaccuracies.







CRI-H650 | HIGH CRI SENSOR HELMET HEADTORCH

- Powerful 650 Lumen High CRI 96+ white COB LED, 6500k
- With 40 lumen 620nm Red static and flashing modes for night vision and emergency
- Wide COB LED shape produces a smooth even flood of light
- 150˚ Rotating head angle
- Optional motion sensor for hands-free activation
- Smart Memory - remembers last mode used (white & red modes)
- Press & hold smooth dimming on white modes
- Adjustable non-slip silicone-lined headband, 3M VHB adhesive helmet mount, 0.5m USB-C charging cable and hard-shell protective zipped storage case included
- Useful battery level & charging indicator under switch - 4 hour charge time via headtorch 1A charge port
- Battery is easily removed and replaced, so a convenient spare can be kept at hand
- Powerful 'LG' 3400mAh 3.6V 18650 Li-ion battery with bi-directional USB-C port
- Bi-directional USB-C port on the battery allows quicker 2A charging time and can be used as a 1A powerbank output to charge other devices

BATTERY	1 x 3.6V 18650 3400mAh Li-ion Battery
WEIGHT	123g (Headtorch with battery, no headband)
DIMENSIONS	Headtorch L 50.65 x W 79.5 x H 39.5 mm

UNILITE

LUMEN 650LM | **RUNTIME** 3-64H | **BEAM** 32M | **IP RATING** IPX5

Information correct at time of going to press. Not all products are available in all regions. This document has been translated using AI and may contain inaccuracies.









TL-6000 | SUPER TOUGH TRIPOD LIGHT

- Ultra bright 6000 lumen 6500K SMD LEDs
- Multiple colour temperatures - CCT: 2700k / 3500k / 4500k / 5500k / 6500k
- Dual Power - rechargeable and mains powered
- 2 Independent heads fold-out 90˚ and pivot 330˚ for light direction where its required
- Super tough heavy duty nylon, polycarbonate & aluminium construction
- Quick release set-up & fold down for rapid deployment/pack up
- Extends to 2.24m & folds down to 1.2m
- Smart Memory Switch - remembers last mode used
- IP65 dust & water resistant
- IK07 shock proof and 2m drop resistant
- High capacity 14.8V 5200mAh Li-ion battery
- 5 x Battery level and charging indicators
- Mains 20V 1.1A multi-country charger/power lead included (inc UK, EU, US & AU adaptors)
- Quick 4.5 hour charge time

BATTERY	14.8v 5200mAh Li-ion
WEIGHT	4400g
DIMENSIONS	Folded: W 142 x H 1200 x D 142mm

UNILITE

LUMEN 6000LM | **RUNTIME** 2-16H | **BEAM** 64M | **IP RATING** IP65/IK07

Information correct at time of going to press. Not all products are available in all regions. This document has been translated using AI and may contain inaccuracies.



PL-3 | INSPECTION PENLIGHT

- 275 lumen white SMD LEDs, 6500k
- Die cast aircraft grade aluminium construction
- Easy press rubberised micro-switch
- 3 Light mode settings
- Strong magnetic base
- Useful rear aluminium pocket clip
- IPX4 water resistant
- 1m drop resistant

BATTERY	3 x 1.5v AAA Alkaline Batteries (inc.)
WEIGHT	57g (without batteries)
DIMENSIONS	154 x 15 x 21.5mm

UNILITE

LUMEN 275LM | **RUNTIME** 3-16H | **BEAM** 23M | **IP RATING** IPX4

Information correct at time of going to press. Not all products are available in all regions. This document has been translated using AI and may contain inaccuracies.









K-550 | COMPACT MINI WORK LIGHT

- 550 Lumen 5.7W white 6500K COB LED
- Press & Hold Turbo mode with additional red
- modes - 6 different lighting modes
- Ultra tough nylon & polycarbonate construction
- Super compact and lightweight size
- 160˚ Rotating stand with strong magnet
- Smart Memory - remembers last mode used
- Glow-in-the-Dark strip around led
- Comes with a carabiner and handy storage bag
- IPX6 water proof
- Powerful 3.7v 1200mAh li-polymer battery
- Useful battery level & charging indicators
- Fast 1A USB-C charging - 1.5 hour charge time
- 30cm USB-C charging cable included

BATTERY	3.7v 1200mAh Li-po
WEIGHT	74g
DIMENSIONS	54 x 28 x 60mm

*550 lumen is Turbo mode and operates by 'press & hold' switch with 1 hour total runtime. High mode is 375 lumen with 3 hour runtime.

UNILITE

LUMEN 550LM | **RUNTIME** 1*-28H | **BEAM** 29M | **IP RATING** IPX6

Information correct at time of going to press. Not all products are available in all regions. This document has been translated using AI and may contain inaccuracies.









FLX-125 | TELESCOPIC MAGNETIC CAPTURE LAMP

- SMD White LED 6000K 125 lumens 1 W
- Extendable telescopic handle with flexible gooseneck to reach tight spaces
- Powerful magnet around the LED to serve as a pick-up tool
- Extends from 177 mm to 505 mm
- Ultra-lightweight compact pocket size
- Ultra-strong nylon and aluminium construction
- Smart memory switch - remembers the last mode used
- Useful pocket clip and ultra-powerful magnetic base
- Ultra-resistant IK09IP65 construction
- IP65 dust and water resistant
- Protection against overcharging and excessive discharging
- 3-colour battery level indicator
- Green to green flashing charging light
- Fast USB-C 2A charging - Charging time of 2.5 hours
- High-quality 0.5 m USB-C cable included

BATTERY	3.7v 180mAh Li-ion
WEIGHT	88.8g
DIMENSIONS	177 x Ø21 x Ø17.5mm (closed) 522 x Ø21 x Ø17.5mm (extended)

LUMEN 125LM | **RUNTIME** 2-6H | **BEAM** 13M | **IP RATING** IP65/IK09

Information correct at time of going to press. Not all products are available in all regions. This document has been translated using AI and may contain inaccuracies.







IL-425R | FOLDING INSPECTION LIGHT

- 425 lumen white COB LED, 6500k
- Secondary rear 150 lumen white SMD LED, 6500k
- Extra top torch - 80 lumen SMD LED, 6500k
- Ultra lightweight compact pocket size
- 180˚ vertical folding head
- Super tough aluminium & nylon construction
- Useful pocket clip
- Super strong magnetic base
- IK07 shock resistant - 2m drop resistant
- High quality 1100mAh li-ion battery
- Low battery 3x warning flash - reminds when charging is needed
- Quick 1A USB-C charging - 3 hour charge time
- 1m high quality USB-C cable included

BATTERY	3.7v 1100mAh Li-ion
WEIGHT	105g
DIMENSIONS	folded 147 x 33.5 x 21 mm extended 279 x 33.5 x 21 mm

LUMEN 425LM | **RUNTIME** 3-6.5H | **BEAM** 31M | **IP RATING** IP20/IK07

Information correct at time of going to press. Not all products are available in all regions. This document has been translated using AI and may contain inaccuracies.







IL-925R | FOLDABLE INSPECTION LAMP

- 925-lumen Whitehe COB LED, 6500K
- 475-lumen secondary rear Whitehe COB LED, 6500K
- Additional top torch – 150-lumen SMD LED, 6500K
- Compact, portable design
- Ultra-resistant aluminium and nylon construction
- 180˚ vertical folding head
- Super powerful magnetic base
- IK07 shock resistant – Withstands drops from 2 m
- IP54 dust and water resistant
- High-quality 2600 mAh Li-ion battery
- Battery level and charging indicators
- Fast 1A USB-C charging – 4-hour charging time
- High-quality 1 m USB-C cable included

BATTERY	3.7v 2600mAh Li-ion
WEIGHT	193 g
DIMENSIONS	folded 162 x 40 x 29 mm extended 304 x 33 x 29 mm

LUMEN 925 LM | **RUNTIME** 2.5-9 H | **BEAM** 41 M | **IP RATING** IP54/IK07

Information correct at time of going to press. Not all products are available in all regions. This document has been translated using AI and may contain inaccuracies.







SLR-1450 | COMPACT WORK LIGHT

- 1450 lumen white COB LED, 6500k
- With 150 lumen 6500k white LED flashlight
- Plus 45 lumen Red and Red flash modes
- Powerful 'LG' 3.7v 5000mAh 21700 Li-ion battery
- Super tough copolymer and aluminium construction
- 180˚ rotating handle/stand with carabiner snap hook
- Strong magnets within the stand
- Glow-in-the-dark strip for extra visibility
- Battery level and charging indicators
- Faster 2A USB-C charging - 3 hour charge time
- 1m high quality USB-C cable included
- Battery can be removed so a convenient spare can be kept at hand
- 21700 battery has its own USB-C port so is easily charged out of the lamp

BATTERY	3.7v 5000mAh 21700 Li-ion
WEIGHT	288g
DIMENSIONS	folded H 122.5 x W 50.5 x D 50.5mm extended H 219 x W 50.5 x D 50mm

LUMEN 1450LM | **RUNTIME** 3-90H | **BEAM** 53M | **IP RATING** IPX5

Information correct at time of going to press. Not all products are available in all regions. This document has been translated using AI and may contain inaccuracies.







SLR-1750 | WORK LIGHT WITH POWERBANK

- 1750 lumen white COB LED, 6500k
- Red LED modes for emergency / signalling / night vision
- Built-in USB power bank with multiple intelligent outputs - 5V-3A/9V-2A/12V-1A
- Super tough copolymer and aluminium construction
- 180˚ rotating handle/stand with carabiner snap hook
- Strong magnets within the stand
- Glow-in-the-dark strip for extra visibility
- Super high power 'LG' 10,400mAh battery
- Battery level and charging indicators
- Faster 4 - 4.5 hour USB-C charging with multiple inputs - 5V-3A/9V-2A
- 1m high quality USB-C cable included

BATTERY	3.7v 10,400mAh Li-ion
WEIGHT	600g
DIMENSIONS	folded - 102 x 158 x 55mm extended - 102 x 268 x 48mm

LUMEN 1750LM | **RUNTIME** 4.5-195H | **BEAM** 50M | **IP RATING** IPX5

Information correct at time of going to press. Not all products are available in all regions. This document has been translated using AI and may contain inaccuracies.









CL-1700 | HEAVY DUTY CLAMP WORK LIGHT

- 1700 Lumen 15W white 6500k COB LED
- Ultra tough nylon & TPE over-moulded housing
- Incredibly strong jaw clamp to attach almost anywhere
- Extra strong magnet on base with 4 non-slip rubber feet
- Clamp handles allow the lamp to stand-up in various positions
- Light head lifts up/down 270˚ & rotates around 340˚
- Smart memory switch - remembers last used mode
- IK07 super tough construction
- Over-charge & over-discharge protection
- 3 battery level & charging indicators
- Low battery warning 3x flash - reminds to charge
- Supports 'PD' power delivery fast charging
- Faster 3A USB-C charging - 5 hour charge time
- 1m high quality USB-C cable included

BATTERY	3.7V 5200mAh Li-ion
WEIGHT	626.4g
DIMENSIONS	176 x 100 x 94mm

UNILITE

LUMEN 1700LM | **RUNTIME** 3-22H | **BEAM** 53M | **IP RATING** IP65/IK07

Information correct at time of going to press. Not all products are available in all regions. This document has been translated using AI and may contain inaccuracies.









PB-10050 | SUPER HEAVY-DUTY MAGNETIC POWER BANK WITH FLASHLIGHT

- High quality 3.6V 10050mAh internal Li-ion battery
- Intelligent multiple outputs via USB-A port, supporting fast charging (5V-2A / 9V-2A / 12V-1.5A)
- Fast 2A USB-C recharging - 4.5 hr charge time
- Over-charge, over-load, deep-discharge and short-circuit protection
- 3 Battery level & charging indicator LEDs
- Super tough nylon & TPR construction
- IK07 shock proof - 2m drop proof
- IP65 dust & water proof
- Super strong magnetic base
- Sturdy rear aluminium pocket clip
- 250 Lumen 6500k SMD LED flashlight
- With a massive 75hr runtime

BATTERY	3.6V 10050mAh Li-ion
WEIGHT	265g
DIMENSIONS	114 x 65 x 32mm

UNILITE

LUMEN 250LM | **RUNTIME** 75H | **BEAM** 21M | **IP RATING** IP65/IK07

Information correct at time of going to press. Not all products are available in all regions. This document has been translated using AI and may contain inaccuracies.







NL-350R | RECHARGEABLE NECK LIGHT

- High quality 350 lumen 6500k white SMD LEDs
- Super lightweight, adjustable and comfortable
- 2 light heads can be adjusted independently
- Super tough polycarbonate & ABS construction
- Up to 120° wider lighting angle
- IK07 Shock proof - 2m drop resistant
- IP54 Dust & water resistant
- Circuit protection prevents battery from over-charging or over-discharging
- High quality 3.7v 700mAh Li-ion battery
- 3 colour LED battery level indicator
- Charging indicator - Green flash: Charging / Green: Fully Charged
- Low battery 3x warning flash - reminds when charging is needed
- USB-C charging cable included - quick 2° hour charge time

BATTERY	3.7v 700mAh Li-ion
WEIGHT	140g
DIMENSIONS	230 x 150 x 23mm

LUMEN 350LM | **RUNTIME** 2-10H | **BEAM** 45M | **IP RATING** IP54/IK07

Information correct at time of going to press. Not all products are available in all regions. This document has been translated using AI and may contain inaccuracies.







HL-4R | USB HELMET HEADTORCH

- 275 lumen white CREE LED, 6500k
- 2 x 5mm red LEDs for night vision - ON and FLASHING
- Red-to-Green charging indicator
- Easy push micro switch
- 45˚ rotational head
- Strong ABS housing
- Fully adjustable non-slip silicone headband
- 3M VHB adhesive helmet mount (included)
- 1m impact resistant
- Now Faster 1A USB-C charging - 2.5 hour charge time
- 1m USB-C charging cable included

BATTERY	3.7v 1800mAh Li-Polymer
WEIGHT	78g
DIMENSIONS	headtorch 63 x 40 x 42mm

UNILITE

LUMEN 275LM | **RUNTIME** 6.5-170H | **BEAM** 95M | **IP RATING** IPX5

Information correct at time of going to press. Not all products are available in all regions. This document has been translated using AI and may contain inaccuracies.







HL-8R | DUAL BEAM SENSOR HEADTORCH

- 475 lumen white SMD LEDs, 6500k
- 2 x Side SMD LEDs for wide flood lighting
- 250 lumen SMD LED for long distance spot beam
- Sensor mode for hands-free operation
- Super tough construction with rubberised coating
- IK07 shock resistant
- IP65 dust & water resistant
- 1m impact resistant
- 60˚ rotational head
- Fully adjustable non-slip silicone lined headband
- Red-to-Green charging indicator light
- Fast 1A USB-C rechargeable - 2.5 hours charge time
- 1m USB-C charging cable included

BATTERY	3.7v 1500mAh Li-Polymer
WEIGHT	111g
DIMENSIONS	headtorch 47.5 x 78.5 x 46mm

LUMEN 475LM | **RUNTIME** 4-35H | **BEAM** 90M | **IP RATING** IP65/IK07

Information correct at time of going to press. Not all products are available in all regions. This document has been translated using AI and may contain inaccuracies.







HT-700 | SENSOR HELMET HEADTORCH WITH RGB LED

- High power 700 lumen Dual white 6500k Cree LEDs
- White spot beam & flood beam LEDs
- Red/Green/Blue LED for night vision/map reading/ signalling
- With red flashing mode for emergency
- 150˚ Rotating head angle
- Smart Memory - remembers last white mode used
- Press & hold smooth dimming on white modes
- Optional motion sensor for hands-free activation
- IP65 Dust & water resistant
- Adjustable non-slip silicone lined headband included
- 3M VHB Adhesive helmet mount included
- Hard-shell protective zipped storage case included
- Useful battery level & charging indicator under switch
- 30cm High quality USB-C Charging cable included
- USB-C 5V-1A charging - 4 hr charge time
- 1 x 3.6V 18650 3400mAh Li-ion battery included with bi-directional USB-C port
- Battery can easily be removed & replaced, and used as an independent powerbank

BATTERY	1 x 3.6V 18650 3400mAh Li-ion Battery
WEIGHT	121g (Headtorch with battery, no strap)
DIMENSIONS	Headtorch L 50.65 x W 79.5 x H 39.5mm

LUMEN 700LM | **RUNTIME** 5.5-170H | **BEAM** 70M | **IP RATING** IP65

Information correct at time of going to press. Not all products are available in all regions. This document has been translated using AI and may contain inaccuracies.









HT-1600R | SUPER BRIGHT POWERBANK HEADTORCH

- Super bright 1600 lumen 6500k white LEDs
- Easy twist smooth dimming switch
- White spot beam & flood beam LEDs
- Red LEDs for night vision & emergency/signalling
- 60˚ Rotating head angle
- Adjustable non-slip silicone lined headbands
- Smart Memory - remembers last white mode used
- IPX5 water resistant
- Hard-shell protective zipped storage case included
- 1m High quality USB-C Charging cable included
- 2 x 21700 5000mAh Li-ion batteries
- Parallel circuitry (can run on 1 or 2 batteries)
- Useful battery level & charging indicators
- Fast 5V-3A USB-C charging - 5 hr charge time
- Battery pack can be completely detached & used as an independent powerbank (5V-3A output)
- Each 21700 battery is also its own independent power bank

BATTERY 2 x 3.7v 21700 5000mAh Li-ion
WEIGHT 392g (with 2 batteries)
DIMENSIONS Headtorch H 40 x W 65 x D 35.5mm / Battery pack H 50 X W 106 X D 30mm

UNILITE

LUMEN 1600LM | **RUNTIME** 8-38H | **BEAM** 128M | **IP RATING** IPX5

Information correct at time of going to press. Not all products are available in all regions. This document has been translated using AI and may contain inaccuracies.









F-1400 | DUAL POWER ALUMINIUM FLASHLIGHT

- High quality 1400 lumen white LED, 6500k
- Hard anodized die cast matte aluminium body
- Tactical rubberised tail switch
- 4 light modes and 8Hz defence strobe
- Flawless smooth reflector for long distance beam
- IP68 dust and waterproof - 1m submersible
- Impact resistant to 2m
- Built-in concealed USB-C charging port
- Battery level and charging indicator LED
- Circuit Protection prevents battery from over-charging or over-discharging
- Fast 1A USB-C charging - 2.5 hour charge time
- High quality USB-C charging cable inc. (0.5m)
- Can also work with 2 x CR123A lithium batteries (not inc.)
- Safety nylon wrist strap included

BATTERY	3.6V 2600mAh 18650 Li-ion (inc.) / or 2 x CR123A batteries (not inc.)
WEIGHT	157g (with li-ion battery) / 109g (without battery)
DIMENSIONS	140 x Ø 30x Ø 25mm

LUMEN 1400LM | **RUNTIME** 2.5-23H | **BEAM** 180M | **IP RATING** IP68

Information correct at time of going to press. Not all products are available in all regions. This document has been translated using AI and may contain inaccuracies.

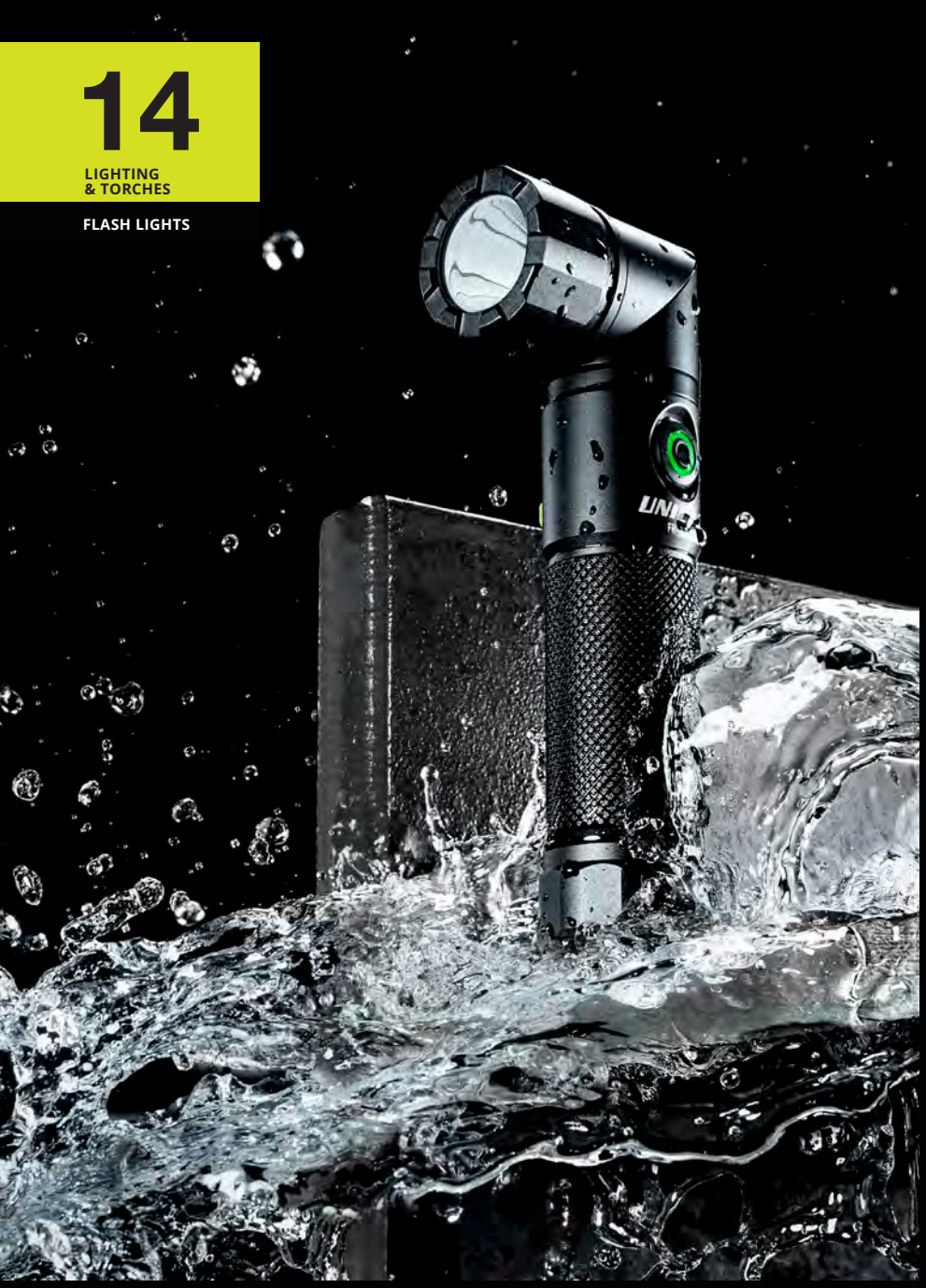





FR-1200 | DUAL POWER RIGHT ANGLE FLASHLIGHT

- High quality 1200 lumen white LED, 6500k
- Hard anodized die cast matte aluminium body
- Head rotates to 90-degree angle
- Useful pocket clip and strong magnetic base
- Rubberised easy press side switch
- 3 light mode settings
- Flawless smooth reflector for long distance beam
- IP65 dust and water resistant
- Impact resistant to 2m
- Built-in rubberised USB-C charging port
- Battery level and charging indicator under the switch
- Circuit Protection prevents battery from over-charging or over-discharging
- Fast 1A USB-C charging - 2.5 hour charge time
- High quality USB-C charging cable inc. (0.5m)
- Can also work with 2 x CR123A lithium batteries (not inc.)

BATTERY	3.6V 2600mAh 18650 Li-ion (inc.) / or 2 x CR123A batteries (not inc.)
WEIGHT	209g (with li-ion battery) / 161g (without battery)
DIMENSIONS	Extended length 160.5 x Ø 30x Ø 27mm

UNILITE

LUMEN 1200LM | **RUNTIME** 3-14H | **BEAM** 180M | **IP RATING** IP65

Information correct at time of going to press. Not all products are available in all regions. This document has been translated using AI and may contain inaccuracies.

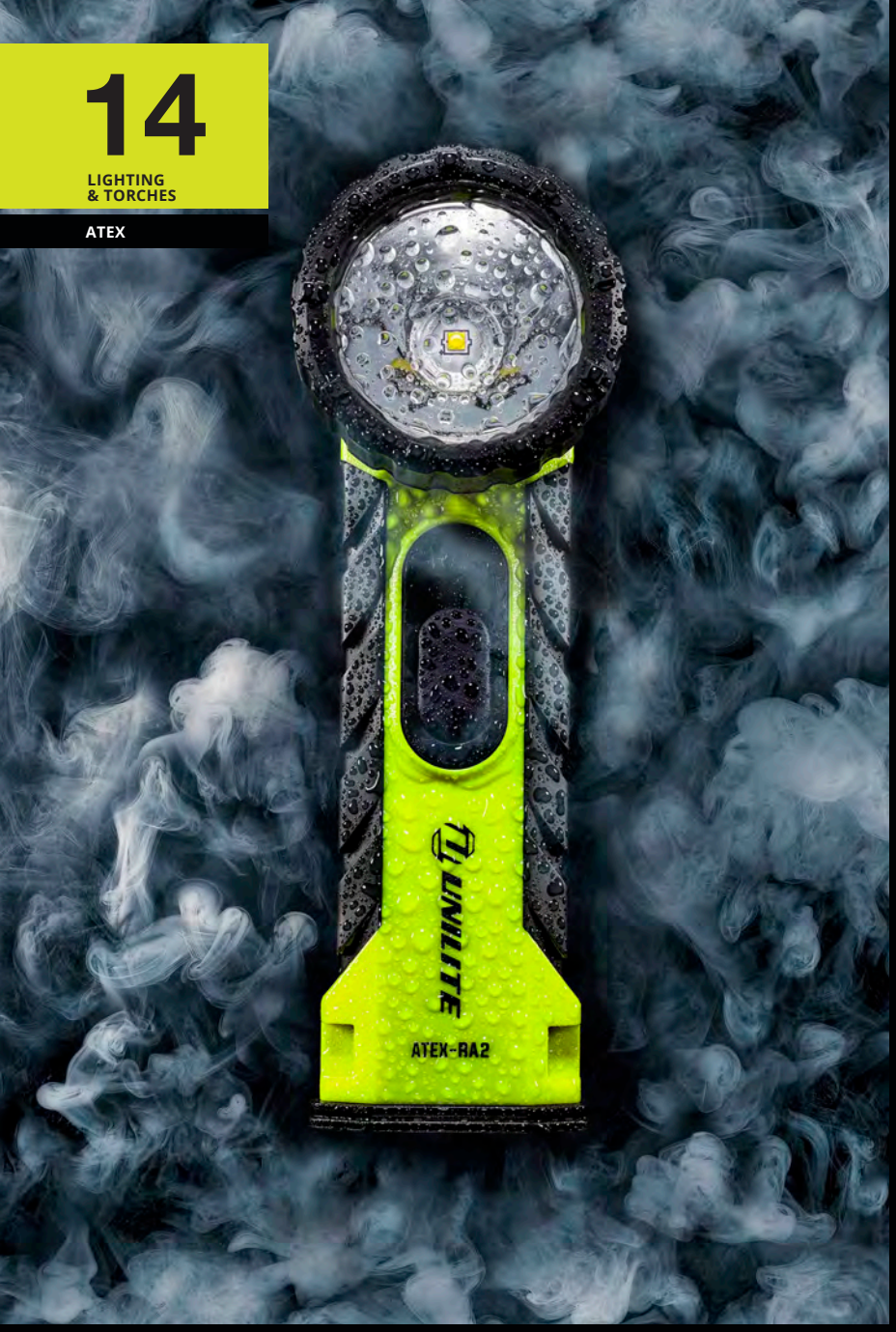



ATEX-RA2 | ZONE 0 INTRINSICALLY SAFE RIGHT ANGLE TORCH

- 350 lumen white CREE LED, 6500k
- ATEX Zone 0 gas compliant
- Suitable for mining
- Safety release valve to release hydrogen gases
- Chemical and corrosion resistant
- Ultra strength polycarbonate housing
- Rubberised head and grips for durability
- Convenient rear stainless steel pocket clip
- Safety locking battery compartment
- Easy push micro switch operation
- IP54 dust and water resistant

BATTERY	4 x 1.5V AA Alkaline Batteries (not inc.)
WEIGHT	250g (without batteries)
DIMENSIONS	183 x 69 x 63mm

REACH UK CA RoHS

LUMEN 350LM | **RUNTIME** 6.5-13H | **BEAM** 288M | **IP RATING** IP54

Information correct at time of going to press. Not all products are available in all regions. This document has been translated using AI and may contain inaccuracies.







ATEX-FL4 | ZONE 0 INTRINSICALLY SAFE FLASHLIGHT

- 150 lumen white CREE LED, 6500k
- ATEX Zone 0 gas compliant
- Safety release valve to release hydrogen gases
- Chemical and corrosion resistant
- Rubberized head & handle for greater durability
- Industrial strength polycarbonate housing
- Detachable pocket clip included for hands free use
- Safety locking battery compartment
- Polycarbonate lens and smooth reflector for long distance beam
- Optional brackets available for helmets
- IP67 dust and waterproof
- 3m submersible

BATTERY	4 x 1.5V AA Alkaline Batteries (not inc.)
WEIGHT	115g (without batteries)
DIMENSIONS	174 x 47 x 47mm

LUMEN 150LM | **RUNTIME** 6-69H | **BEAM** 235M | **IP RATING** IP67

Information correct at time of going to press. Not all products are available in all regions. This document has been translated using AI and may contain inaccuracies.







ATEX-H2 | ZONE 0 INTRINSICALLY SAFE HEADTORCH

- 225 lumen white CREE LED, 6500k
- ATEX Zone 0 gas compliant
- Safety release valve to release hydrogen gases
- Strong ABS housing with durable synthetic rubber coating
- Safety locking battery compartment
- Easy press rubberised switch
- 2 mode light settings
- 90˚ rotational head
- Silicone lined non-slip headband included
- IP67 dust and waterproof
- 1m submersible

BATTERY	3 x 1.5V AAA Alkaline Batteries (not inc.)
WEIGHT	130g (without batteries)
DIMENSIONS	headtorch 80 x 50 x 45mm

LUMEN 225LM | **RUNTIME** 5-12H | **BEAM** 115M | **IP RATING** IP67

Information correct at time of going to press. Not all products are available in all regions. This document has been translated using AI and may contain inaccuracies.

Safety Glasses 246-248
Cut & Impact-Resistant Gloves 249
Zipped Jumpers 250

16 PPE



ASPEN PUMPS GROUP







SG-YFG | SAFETY GLASSES WITH CLEAR LENSES & FOAM GASKET

- Tough flexible polycarbonate frame
- 8-Base curved toughened polycarbonate clear lenses
- Hytrel black back frame with EVA foam gasket
- K & N anti-scratch & anti-fog lens coatings
- 99% UV A/B/C protection (EN170)
- Flexible PC & TPR co-injected side arms
- With side temple ventilation
- Adjustable TPR non-slip nose pads
- Reinforced nose bridge
- Micro-fibre drawstring storage bag included

LENS MARKINGS

- Lens Filters: 2C (UV EN170) 1.2 (Clear)
- Optical Class: 1 (high optical quality)
- Lens Coatings: Anti-Scratch - K Anti-Fog - N
- Mechanical risk: Low energy impact - F
- High speed particles at extreme temperatures - T

WEIGHT 39.5g

CERTIFICATIONS CE - EN166 / USA - ANSI Z87.1 / AUS/NZ - AS/NZS 1337.1

Information correct at time of going to press. Not all products are available in all regions. This document has been translated using AI and may contain inaccuracies.







SG-YCB | SAFETY GLASSES WITH CLEAR BLUE LIGHT LENSES

- Tough flexible polycarbonate frame
- 8-Base curved toughened polycarbonate lenses
- Clear 420Cut blue light blocking lenses
- Blocks harmful HEV blue light up to 420nm
- K & N anti-scratch & anti-fog lens coatings
- 99% UV A/B/C protection (EN170)
- Flexible PC & TPR co-injected side arms
- Adjustable rubberized non-slip nose pads
- Reinforced nose bridge
- Micro-fiber drawstring storage bag included

LENS MARKINGS

- Lens Filters: 2C (UV EN170) 1.2 (Clear)
- Optical Class: 1 (high optical quality)
- Lens Coatings: Anti-Scratch - K Anti-Fog - N
- Mechanical risk: Low energy impact - F
- High speed particles at extreme temperatures - T

WEIGHT 1oz

CERTIFICATIONS CE - EN166 | USA - ANSI Z87.1 | AUS/NZ - AS/NZS 1337.1

Information correct at time of going to press. Not all products are available in all regions. This document has been translated using AI and may contain inaccuracies.







SG-YDS | SAFETY GLASSES WITH DARK SMOKE LENSES

- Tough flexible polycarbonate frame
- 8-Base curved toughened polycarbonate lenses
- Dark smoke lens tinting
- K & N anti-scratch & anti-fog lens coatings
- 99% UV A/B/C protection (EN172)
- Flexible PC & TPR co-injected side arms
- Side temple ventilation
- Adjustable rubberised non-slip nose pads
- Reinforced nose bridge
- Micro-fibre drawstring storage bag included

LENS MARKINGS

- Lens Filters: 5 (UV EN172) 2.5 (Dark Smoke)
- Optical Class: 1 (high optical quality)
- Lens Coatings: Anti-Scratch - K Anti-Fog - N
- Mechanical risk: Low energy impact - F
- High speed particles at extreme temperatures - T

WEIGHT 28g

CERTIFICATIONS CE - EN166 / USA - ANSI Z87.1 / AUS/NZ - AS/NZS 1337.1

Information correct at time of going to press. Not all products are available in all regions. This document has been translated using AI and may contain inaccuracies.



		S/7	M/8	L/9	XL/10	XXL/11
Longest finger length to cuff	Inches	9	9 ½	10	10 ¼	10 ½
	CM	22.5	24	25	26	27
Palm width at the Knuckles	Inches	3 ¼	3 ½	3 ½	4	4
	CM	8.5	8.75	9	10	10.5
there may be variances in measurements due to hand cutting & stitching						

UG-12C4 | HEAVY DUTY CUT-D IMPACT GLOVES

- Cut resistant gloves with full dorsal TPR impact protection
- Flexible lightweight design, TPR weighs less than 60g
- Heavy duty 15-Gauge high-performance polyethylene (HPPE) yarn interwoven with steel and glass fibres for added strength and high cut resistance
- Sandy nitrile half-dip coating offers excellent grip
- TPR is sonic welded to the glove for greater longevity
- Adjustable TPR velcro wrist strap for secure fit
- Synthetic leather stitched cuff for durability
- Touch screen technology
- EN388 mechanical hazard protection: 4X42DP - cut level D
- ANSI/ISEA 138 impact resistant level 2
- ANSI cut resistant level A4
- Available in 5 EU sizes - 7/S, 8/M, 9/L, 10/XL & 11/XXL.

EN388
4X42DP

ANSI
A4
CUT

ANSI/ISEA 138
2

CERTIFICATIONS EN ISO 21420:2020 | EN388:2016+A1:2018 | ANSI/ISEA 2016 | ANSI/ISEA138:2019

Information correct at time of going to press. Not all products are available in all regions. This document has been translated using AI and may contain inaccuracies.







ZFJ | FLEECE LINED JUMPER

- 260gsm Thick 100% polyester black zipped jumper
- Soft brushed fleece lining for superior warmth
- Hi-vis yellow and reflective details for added safety
- Elastic zip pull tabs ensure effortless access, making it a breeze to reach for your essentials on the go
- Unilite branded YKK 'reversed' zippers, delivering a double dose of water and wind resistance
- Windbreaker flap on main zip, creating an impenetrable barrier against chilling gusts
- Branded reflective elasticated cuffs to keep the cold out, fusing practicality with style

		S	M	L	XL	2XL	3XL
Chest Size	**Inches**	39 ½	41	43	45 ½	48	50
	CM	100	104	109	115	121	127
there may be a 1-3cm difference in measurements due to hand cutting							

UNILITE

Information correct at time of going to press. Not all products are available in all regions. This document has been translated using AI and may contain inaccuracies.



ASPEN PUMPS GROUP

The Brands

Making life easier for the HVAC/R engineer

Aspen Pumps are at the forefront of condensate pump technology. As engineers, we understand the complexity of installations and so create market leading products that are designed to best suit the application and environment. We pride ourselves on providing professionals with everything they need for the perfect installation; from pumps to pipe we have it all.



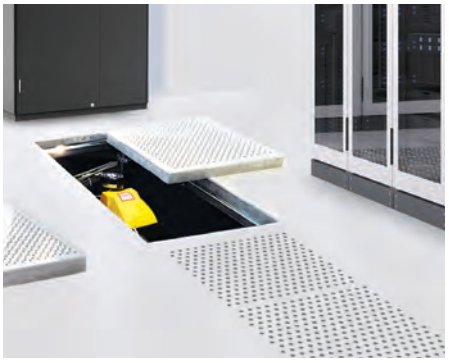





Information correct at time of going to press. Not all products are available in all regions. This document has been translated using AI and may contain inaccuracies.

Aspen Xtra represents the largest range of installer ancillaries on the market – from Isolators to pipe connectors, wall brackets to vinyl tubing – whatever you need, reach for Xtra.









Information correct at time of going to press. Not all products are available in all regions. This document has been translated using AI and may contain inaccuracies.

2EMMECLIMA

2 Emme Clima was founded in Italy in 2008 and, thanks to its expertise, quickly became one of the largest companies in the air conditioning sector. The company is represented both on the Italian market and worldwide and specialises in the production of support brackets and accessories for condensing units. With the integration of a paint shop, 2 Emme Clima became the first company in Europe with a complete production process. To date, over 1,000,000 wall brackets have been produced and sold, making 2 Emme the preferred choice for installers in Europe. In 2022, 2 Emme Clima joined the Aspen Pumps Group family of brands.



Information correct at time of going to press. Not all products are available in all regions. This document has been translated using AI and may contain inaccuracies.

Vecamco is an Italian company with over 40 years of experience in the processing of plastics and metals. Specialised in the production of accessories for air conditioning, heating, and components for ventilation and air treatment. Over the years, Vecamco has quickly established itself as a leading company both nationally and internationally in this sector, offering a wide range of products known for their high quality and continuous innovation. These attributes are the result of ongoing research aimed at meeting customer needs and developing efficient, modern, and innovative solutions.
In 2022, Vecamco became part of Aspen Pumps Group.



Information correct at time of going to press. Not all products are available in all regions. This document has been translated using AI and may contain inaccuracies.

Joining the Aspen Pumps Group in 2018, Advanced is the recognised market leader in specialist HVAC/R cleaning chemicals. The research and development team at Advanced has created a range of chemical cleaning products designed to give optimum cleaning performance across a variety of applications and environments. Trusted by engineers to do the job right, Advanced has been supplying products to the HVAC/R industry for over 30 years.











Information correct at time of going to press. Not all products are available in all regions. This document has been translated using AI and may contain inaccuracies.

JAVAC + JAVAC EDGE

The JAVAC brands have a proud heritage of supplying quality and premium tools to the HVAC/R industry. The devil is in the detail and for over 50 years the JAVAC brand has stood for reliability and service – making JAVAC, and JAVAC Edge, one of the UKs most trusted names in HVAC/R service equipment. As part of the Aspen Pumps Group, our focus is on products which make the installer's life easier.



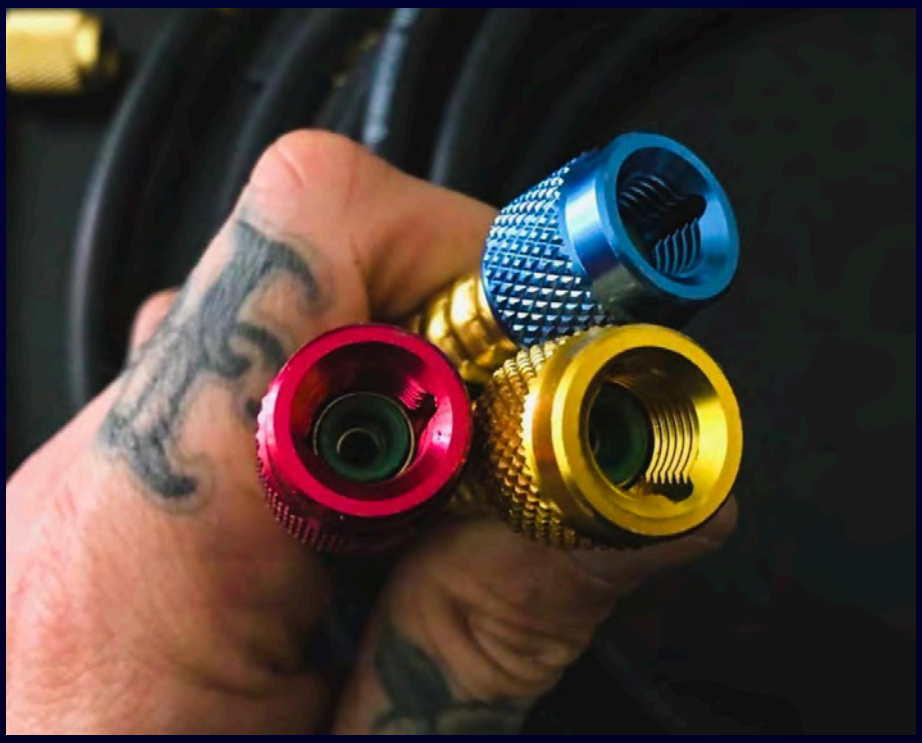







Photo credit: Top left clockwise: @godfreylappage, @hvac_spark, @temp_technical, @temp_technical, @hvac_spark

Information correct at time of going to press. Not all products are available in all regions. This document has been translated using AI and may contain inaccuracies.

SPECTROLINE®

Spectroline has over 65 years designing and manufacturing high-quality fluorescent leak detection dyes and ultraviolet lamps. Our dyes glow brighter than the competition and is a simple and smart investment for detecting leaks whilst working as preventative maintenance revealing leaks in the future. Aspen Pumps Group are a proud and exclusive distributor of Spectroline in the UK.



Information correct at time of going to press. Not all products are available in all regions. This document has been translated using AI and may contain inaccuracies.

C&D VALVE

C&D Valve is a well-established US manufacturer of valves and fittings, with a strong reputation in the HVAC/R sector.

Established in 1967 in Oklahoma City, C&D continues to offer unrivalled product quality and service. Recently acquired by the Aspen Pumps Group, a leading global manufacturer of air conditioning and refrigeration aftermarket products, C&D marks an important step in Aspen's UK manufacturing and sales capabilities.

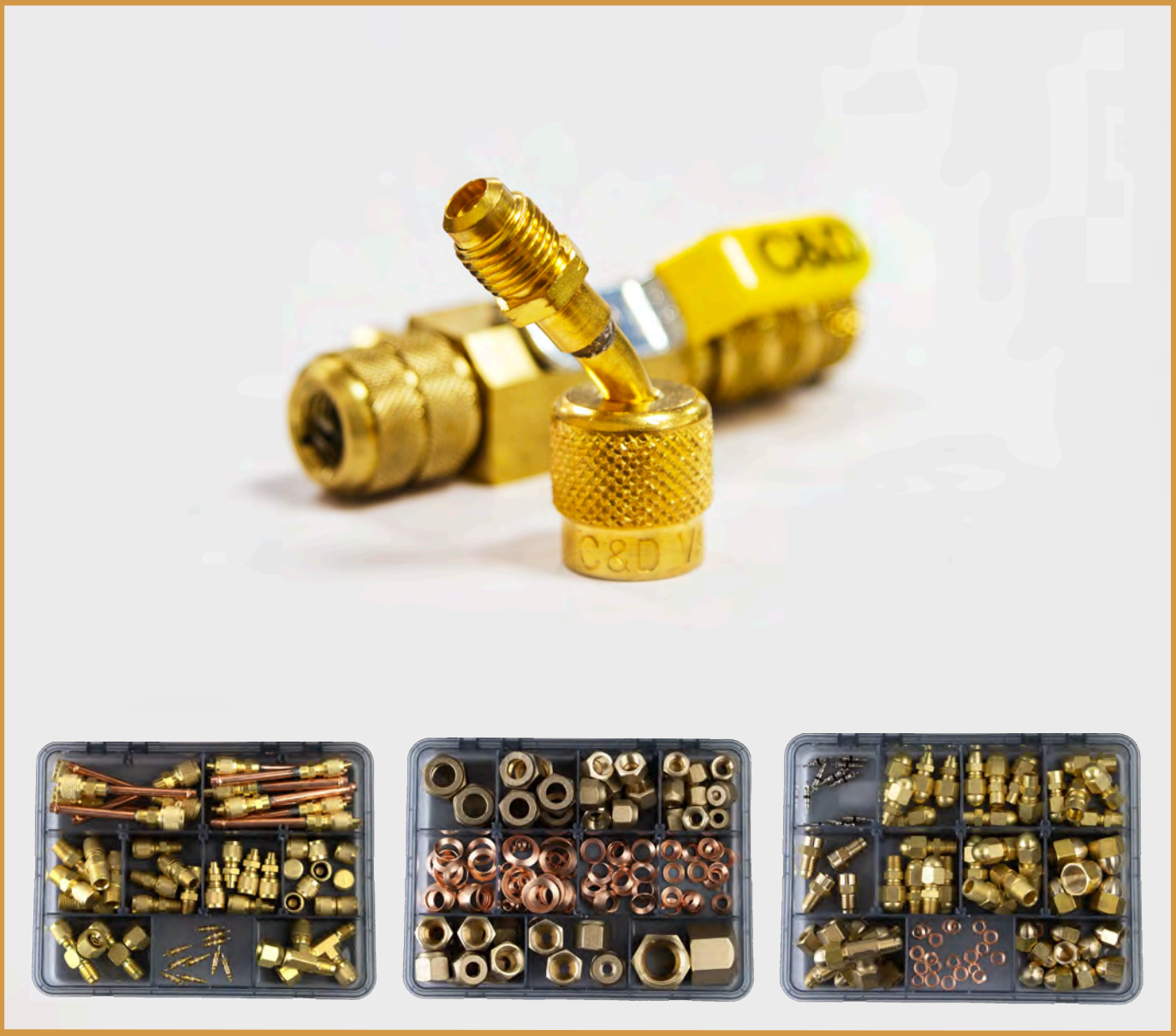

Information correct at time of going to press. Not all products are available in all regions. This document has been translated using AI and may contain inaccuracies.

Unilite has built lights tough since 1981. The range back then was limited to just a handful of product lines. Wind the clock forward 43 years and now there are over 125 products, all with the same Built. Tough. DNA.









Information correct at time of going to press. Not all products are available in all regions. This document has been translated using AI and may contain inaccuracies.

VETO PRO PAC®
TOOL BAGS THAT WORK

The toughest and most versatile tool bag you'll ever own. Maximised tool storage capacity – you will never be short on space. Waterproof base, double stitched, heavy duty plastic coil over sized zips. Industrial strength double nylon stitching. D-Rings: Powder coated steel. Zinc/marine grade press studs. Gun metal/marine grade rivets. Wheels, backpacks, open tops, pouches. Aspen Pumps Group are proud to deliver these superb bags designed for the HVAC/R technician.







Photo credit: Top left clockwise: Veto Pro Pac, BassFilmco/Epic Air, @alstoolchannel.

Scan me for the full range of Veto Bags.**vetopropac.com**

Information correct at time of going to press. Not all products are available in all regions. This document has been translated using AI and may contain inaccuracies.

BIG FOOT®
SYSTEMS

Our aim at Big Foot Systems continues to be 'to provide easy to assemble rooftop building services support systems'. Our range of products provide quick, simple, safe and versatile solutions for the support of rooftop HVAC/R equipment, and access platforms.

Big Foot Systems sets the standard on any installation, meeting the needs of architects, consultants, engineers and contractors. Big Foot products are packed for ease of handling and available internationally via a network of approved distributors.








Information correct at time of going to press. Not all products are available in all regions. This document has been translated using AI and may contain inaccuracies.

SOLFLEX
Acoustic solutions

Solflex, designer and supplier of high-quality acoustic insulation solutions, reduces noise emissions from your air conditioning, refrigeration or heat pump installations to negligible levels without limiting their functionality. Whether you need to comply with regulatory and planning requirements or simply reduce noise levels for yourself or your neighbours, we have a product for you.

We offer packaged solutions for simple installations through to complex bespoke solutions and can assist installers, wholesalers, design offices, consultants, architects, as well as private and commercial building owners and facility operators.



The sound insulation performance of our acoustic enclosures is measured by the Ziehl-Abegg laboratory in accordance with DIN EN ISO 3744.

Information correct at time of going to press. Not all products are available in all regions. This document has been translated using AI and may contain inaccuracies.

Notes

Information correct at time of going to press. Not all products are available in all regions. This document has been translated using AI and may contain inaccuracies.

Notes

Information correct at time of going to press. Not all products are available in all regions. This document has been translated using AI and may contain inaccuracies.

Notes

Information correct at time of going to press. Not all products are available in all regions. This document has been translated using AI and may contain inaccuracies.

Notes

Information correct at time of going to press. Not all products are available in all regions. This document has been translated using AI and may contain inaccuracies.



aspenpumps.com/de

ITALY
Aspen Pumps Italia
Via dell'industria 17,
35030 Bastia di Rovolon (PD) - Italy
Tel: +39 049-9903985

UNITED KINGDOM
Aspen Pumps Group
Apex Way, Hailsham,
East Sussex BN27 3WA, UK
Tel: +44 (0)1323 848842

GERMANY
Aspen Pumps Deutschland
Tichauer Weg 30,
40231 Düsseldorf, Germany
Tel: +49 0211 46 79 79

INDIA
Aspen Pumps India
333, 3rd Floor Devika Tower,
6 Nehru Place, Delhi 110019, India
Tel: +44 (0)1323 848842 (UK Office)

SPAIN
Aspen Pumps Iberia
C/Óptica, 10, 08755 Castellbisbal,
Barcelona, Spain
Tel: +34 93 5458616

FRANCE
Aspen Pumps France
353, Allée des Vergers,
76360 Barentin, France
Tel: +33 (0)1 78 95 88 82

AUSTRALASIA
Aspen Pumps Asia Pacific Pty Ltd
8 Waddikee Rd, Lonsdale,
SA 5160, Australia
Tel: +61 (0)8 8186 4666

NORTH AMERICA
The Malco Group
14080 State Hwy 55 NW | PO Box 400
Annandale, MN 55302-0400 USA
Tel: 1-800-328-3530

A1924 ENEU 110926